Biomedical Signal Processing and Control 84 (2023) 104791

Contents lists available at ScienceDirect

Biomedical Signal Processing and Control

journal homepage: www.elsevier.com/locate/bspc

Transformers in medical image segmentation: A review

Hanguang Xiao *, Li Li *,1, Qiyuan Liu, Xiuhong Zhu, Qihang Zhang

College of Artificial Intelligent, Chongqing University of Technology, Chongqing 401135, China

ARTICLE INFO

Keywords:
Transformer
Medical image
Segmentation analysis
3D segmentation

ABSTRACT

Background and Objectives: Transformer is a model relying entirely on self-attention which has a wide range of applications in the field of natural language processing. Researchers are beginning to focus on the transformer in medical images due to the past few years having seen the rapid development of transformer in many vision fields such as vision transformer (ViT) and Swin transformer. In the last year, moreover, many scholars have applied transformer to medical image segmentation and have achieved good segmentation results. Transformer-based medical image segmentation has become one of the hot spots in this field. The purpose of this work is to categorize and review the segmentation methods of Unet-based transformer and other model based transformer in medical images.

Methods: This paper summarizes the transformer-based segmentation models in the abdominal organs, heart, brain, and lung based on the relevant studies in the last two years. We described and analyzed the model structure including the position of the transformer in the model, the changes made by scholars to transformer and the combination with the model. In this work, the segmentation performance results based on Dice evaluation metrics are compared.

Results: Through the help of 93 references, we find that researchers prefer to use Unet-based transformer models than others and place the transformer structure in the encoder. These new models improve the segmentation performance compared with U-Net and other segmentation models. However, there are not many related studies on lungs, which points to a new way for future research.

Conclusions: We found that the combination of U-Net and transformer is more suitable for segmentation. In future research on medical image segmentation, researchers can use a suitable transformer-based segmentation method or modify the transformer structure according to the segmentation requirements. We hope that this work will be helpful for improvements of the transformer to solve clinical problems in medicine.

1. Introduction

Medical image segmentation has a wide range of applications and research value in medical research, such as lesion segmentation and organ segmentation, which output the region of interest to the doctor by segmentation approaches. The results of the segmentation which is a reliable basis for clinical diagnosis and pathology research help doctors to detect early and make more accurate diagnoses to make effective planning for follow-up treatment.

U-Net [1] as the popularly used model has achieved great results in medical image segmentation. Furthermore, substantial scholars have conducted extensive studies on the U-Net model in the field of medical image segmentation, and have produced some modifications including structural changes. Zhou et al. [2] proposed UNet++, a series of dense and nested skip connections instead of the original simple skip connections, reducing the semantic gap between encoder and decoder. Xiao et al. [3] added SER and ASPP modules on the UNet++ to propose SAUNet++, which not only suppressed the excessive segmentation of background and noise but also paid attention to multi-scale information, so as to improve the segmentation accuracy. Yao et al. [4] introduced residual blocks and attention modules into new network architecture, CLAW U-NET, that learns deeper features to improve the segmentation accuracy in detailed regions. However, making unstructured changes on U-Net is equally important. In addition to proposing a new objective function that is optimized according to Dice, Milletari et al. [5] also applied random non-linear transformations and histogram matching for data enhancement during training so that V-net performs better in segmentation tasks. Isensee et al. [6] pointed out that network structure, preprocessing stage, training stage, etc. are interconnected and each has a significant impact on segmentation results. The nnU-net made only a few changes from the U-Net structure firstly, then Isensee

* Corresponding authors.
E-mail addresses: simenxiao1211@163.com (H. Xiao), lily@stu.cqut.edu.cn (L. Li).
[1] Co-first author.

https://doi.org/10.1016/j.bspc.2023.104791
Received 2 September 2022; Received in revised form 15 February 2023; Accepted 1 March 2023
Available online 7 March 2023
1746-8094/© 2023 Elsevier Ltd. All rights reserved.

et al. enhanced the data by various methods, with the ReLU and batch normalization replaced by Leaky ReLU and instance normalization. Except for U-Net and U-Net variants, a large number of models have been applied to segmentation tasks, including FNN [7], SegNet [8], RefineNet [9], etc.

However, convolutional layers of U-Net can capture image details well, but it has some shortcomings in accessing to global and long-range semantic information. Therefore, many studies have effectively combined convolutional neural network (CNN) with transformer blocks [10–14]. In addition, some pure transformer models have been created [15]. With the development of ViT [16], researchers began to apply transformers to medical image segmentation. At first, TransUNet [13] had a good segmentation performance with transformer on abdominal multiple organs and heart. Subsequently, many researchers have proposed new models to compare the segmentation performance with TransUNet [13], including TransClaw U-net [17], MT-Unet [18], UCTransNet [19], TransFuse [20], CoTr [21] in abdominal organs and UTNetV2 [22], TransNUNet [23], nnFormer [24], D-Former [25] in the heart. Scholars have also done a lot of research on other parts, such as S^2WinTOUnet [26], TransBTS [27], UNETR [28], Swin UNETR [29], BiTr-Unet [30], VT-UNet [31], Hybrid-CTrm [32], SAEM [33] on brain and TransAttUnet [34], HT-Net [35], TSFMUNet [36], AFTer-UNet [37], MMSASegNet [38], USST [39] on lung.

To the best of our knowledge, we categorized and reviewed the transformer in medical segmentation for the first time. We used the Dice to evaluate the segmentation performance of models and summarized the comparison between different models. In order to have a more intuitive comparison, we made four tables on the segmentation methods of abdominal organs, heart, brain and lung in Section 3. We briefly summarized the main methods, dimensions, transformer location, highlights and model comparison. We hope our review can be helpful to future research. In summary, the main contributions of this systematic review are as follows:

(1) This work is the first systematic review of medical image segmentation with transformer blocks. The application of transformer structure to medical image segmentation is frontier research at present. This review is helpful to familiarize and understand the current research status of transformer and expand research ideas and methods.

(2) We reviewed the structure of the model, described the role of the main modules, and gave a visual analysis.

(3) We described the dimension of model input and analyzed the 3D method.

(4) The current research status was described through comparison and analysis of transformer construction and location, and the future research direction of the transformer in medical image segmentation was proposed.

The relevant knowledge of the transformer will be described in Section 2, mainly including ViT [16] and Swin transformer [40]. Section 3 summarizes these transformer segmentation methods from the perspective of abdominal organs, brain, heart and lung. Each part is divided into Unet-based transformer segmentation and other model-based transformer segmentation. Section 4 analyzed the different segmentation methods used in different body parts and summarizes the 2D and 3D models. The conclusion and prospect will be given in Section 6.

2. Transformer

The transformer was first designed in NLP by Vaswani et al. [41], which mainly consists of Multi-Head Attention (MHA) and Position-wise Feed-Forward Networks. The original transformer architecture is shown in Fig. 1. Inspired by the transformer, researchers began to improve the original transformer in the field of computer vision, such as ViT [16] and Swin transformer [40]. In this section, we mainly described the relevant knowledge of ViT [16] and Swin transformer [40].

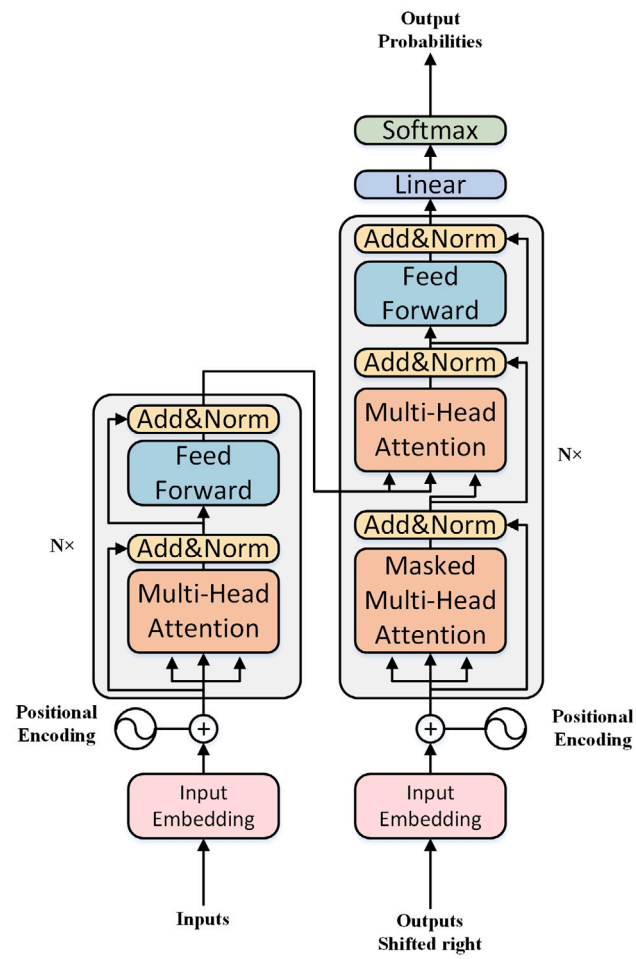

Fig. 1. The Transformer-model architecture. The left half of the picture is an encoder and the right half of the picture is a decoder.

multi-head self-attention: In NLP, the Transformer structure is composed of an encoder and a decoder, as shown in Fig. 1. However, in computer vision tasks, ViT [16] and Swin transformer [40] only use transformer encoder, as shown in Fig. 2. Therefore, the encoder part is mainly described next. The multi-headed attention module is a module in which multiple attention modules learn different aspects of attention in different subspaces. The matrix X consisting of vectors was first obtained, and then mapped to different subspaces by means of the learnable matrices W^Q, W^K, W^V to obtain matrices query(Q), key(K), value(V) respectively. In the encoder, Q, K and V are equal, but it is worth noting that K and V in the second layer of the decoder come from the Encoder, and Q is the output of the first layer of the Decoder result. Q, K and V can be written as,

$$Q = XW^Q,\ K = XW^K,\ V = XW^V \tag{1}$$

Where the matrices $W^Q \in \mathbb{R}^{d_{model} \times d_k}$, $W^K \in \mathbb{R}^{d_{model} \times d_k}$, $W^V \in \mathbb{R}^{d_{model} \times d_v}$. Matrix Q and the transpose of matrix K are used for point multiplication, and the similarity probability is obtained through the softmax function after scaling $\sqrt{d_k}$ times, where d_k is the dimensions of the matrix K. Finally, multiply with V to get the attention weight matrix. The attention mechanism is executed in each head. The formula is as follows:

$$Head_i = Attention(Q, K, V) = softmax(\frac{QK^T}{\sqrt{d_k}})V \tag{2}$$

Finally, project them through the learnable weights $W^O \in \mathbb{R}^{hd_v \times d_{model}}$ to obtain the final feature representation. The i denotes the number of

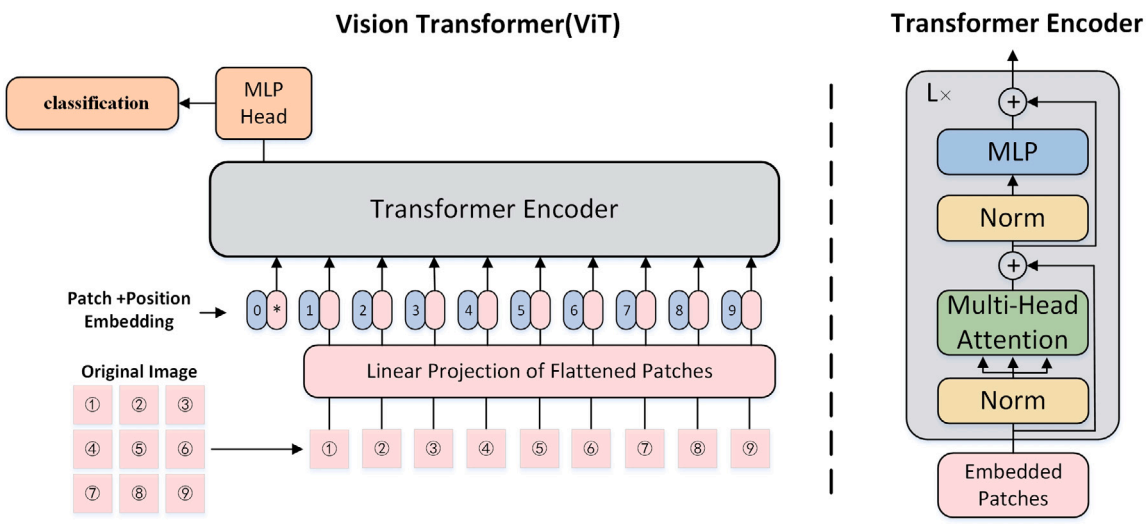

Fig. 2. The Vision Transformer architecture. On the right is the structure of Transformer Encoder.

heads.

$$MHA(Q,K,V) = Concat(Head_1,\dots,Head_i)W^O \tag{3}$$

Multiple subspaces can be formed in the multi-head attention mechanism, and different heads focus on different aspects of information. At the same time, multi-head attention enhances the stability and robustness of the network. In different work, the number of heads may be different. For example, i = 12 in TransUnet [13]. However, in UCTransNet [19], i = 4.

2.1. ViT

Driven by transformer, Dosovitskiy et al. [16] designed ViT for image recognition. Because the transformer only accepts one-dimensional sequences, they first divided the image into equal-sized patches, then these patches were flattened to a 2D-patches sequence. Patch embeddings can be got after linear projection, before these patch embeddings were fed into the transformer encoder, they will be added position embeddings. They remained the multi-head self-attention (MSA) same as transformer and added Multi-layer Perceptron (MLP) into transformer encoder. Finally, image classification was got from the MLP Head module. The vision transformer architecture is shown in Fig. 2.

In the vision domain, researchers chose patch embedding rather than word embedding, patches X are projected into the D-dimensional space and then position encoding is added to guarantee the position information. patch embedding is represented as follows,

$$X_0 = XE + E_{pos} \tag{4}$$

Where $E \in \mathbb{R}^{(P^2\cdot C)\times D}$, $E_{pos} \in \mathbb{R}^{(N+1)\times D}$, P denotes the size of patches, C denotes the number of channels, $N = HW/P^2$, HW denotes the resolution of the original image. For example, in image tasks, the image size is generally 224 × 224, patch size is 16 × 16, then each picture can be divided into 224 × 224 / 16 × 16 patches of equal size, N=196. Then MSA and MLP are calculated as follows,

$$Z_n^{MSA} = MSA(LN(Z_{n-1})) + Z_{n-1} \tag{5}$$

$$Z_n = MLP(LN(Z_n^{MSA})) + Z_n^{MSA} \tag{6}$$

ViT has achieved good development and innovation in medical image segmentation. For example, TransUNet [13] is the first model for segmentation based on ViT, CoTr [21] is the first model on the volumetric data with transformer, UNETR [28] is the first model for feature extraction with transformer instead of CNN. Karimi et al. [42] proposed the first convolution-free deep neural network for medical image segmentation.

2.2. Swin transformer

Liu et al. [40] proposed a vision transformer, Swin transformer, which is based on shifted windows to improve computational efficiency. They designed hierarchical feature maps to obtain feature maps of multi resolution so that the Swin transformer is a general-purpose backbone for computer vision. The Swin transformer architecture is shown in Fig. 3. This Swin transformer block contains two sub-modules, which replace multi head attention in ViT with window multi-head self attention (W-MSA) and shifted window multi-head self attention (SW-MSA), respectively. The Swin transformer block architecture is shown in Fig. 4. After that, Swin transformer is well applied to medical segmentation. Swin-Unet [15] with Swin transformer is the first pure transformer-based U-type architecture. In Swin transformer, MSA and MLP are calculated as follows,

$$Z_n^{W-MSA} = W-MSA(LN(Z_{n-1})) + Z_{n-1} \tag{7}$$

$$Z_n = MLP(LN(Z_n^{W-MSA})) + Z_n^{W-MSA} \tag{8}$$

$$Z_{n+1}^{SW-MSA} = SW-MSA(LN(Z_n)) + Z_n \tag{9}$$

$$Z_{n+1} = MLP(LN(Z_{n+1}^{SW-MSA})) + Z_{n+1}^{SW-MSA} \tag{10}$$

Because W-MSA and SW-MSA are designed in Swin transformer structure, the calculation of attention is limited to each window rather than the whole, which reduces a lot of computational complexity.

3. Transformers in medical image segmentation

In medical image segmentation, solving the problem of complex scale change is the key to obtaining multi-scale features. The success of transformer in image processing has encouraged medical image researchers to investigate its potential in the segmentation of medical images to offer rich information for helping clinicians diagnose and treatment more effectively. The transformer was added to capture long-distance dependencies and global context information in segmentation tasks for avoiding the loss of underlying features which prevents damaging the relevance and integrity of local information.

We reviewed medical image segmentation problems in this section from four perspectives including abdominal organ segmentation, brain segmentation, heart segmentation, and lung segmentation, respectively. Our description and summary were based on two aspects: Unet-based transformer and other model-based transformer. For the Unet-based

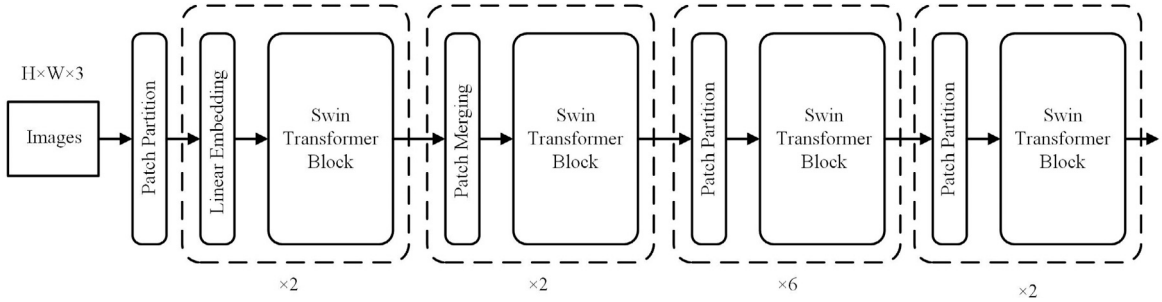

Fig. 3. The Swin Transformer architecture.

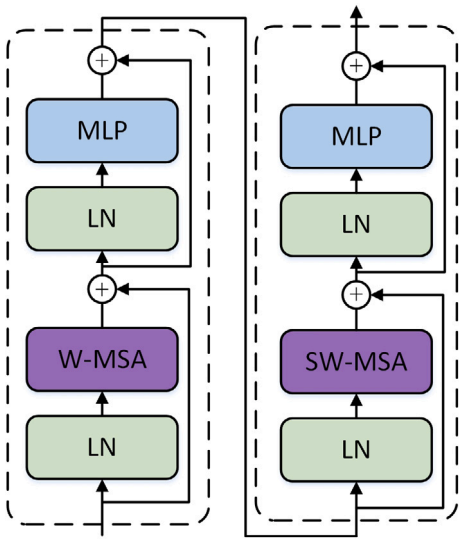

Fig. 4. The Swin Transformer block architecture. W-MSA: window multi-head self attention module and SW-MSA: shifted window multi-head self attention module.

transformer segmentation, we discussed how transformer blocks can better integrate with CNN layer in U-Net and described the function of transformer blocks. In other model-based transformer segmentation methods, we mainly discussed whether the structure of transformer has changed.

3.1. Abdominal organ segmentation

The abdomen is a complex body space that caused many challenges for abdominal organ segmentation. Abdomen organs differ in shape, size, and location. The spatial boundaries of adjacent organs are difficult to determine. Therefore, abdominal organ segmentation faces a great challenge. Many researchers have applied transformer to abdominal multi-organ segmentation, and some others only for single abdominal organs, which both have achieved good segmentation results. We analyzed the abdominal organ segmentation methods in Table 1 includes their applications in 2D and 3D segmentation scenarios, dataset, position of the transformer, highlight, Dice and model comparison.

3.1.1. Unet-based transformer

CNN-transformer as encoder: TransUNet, proposed by Chen et al. [13], was the first work that applied transformer blocks to U-Net structure for the task of medical image segmentation, as shown in Fig. 5. They combined transformer and convolutional layers as an encoder to reduce the loss of low-level detail information in the transformer so that recover local spatial information to enhance the detail. Meanwhile, the global context also can be captured. Transformer gets images from generated feature maps in CNN structure. Then TransUNet leverage a cascaded upsampler (CUP) to output the final segmentation mask. Training and validating the model mainly on the Synapse multi-organ segmentation dataset, the results showed that the Dice of the model were 87.23%, 63.13%, 81.87%, 77.02%, 94.08%, 55.86%, 85.08%, and 75.62% for the eight organs of aorta, gallbladder, left kidney, right kidney, liver, pancreas, spleen, and stomach, respectively. As we can see, the result in the TransUNet is a significant improvement over the V-Net [5] and U-Net [1] models. Meanwhile, they found that setting the initial image to 224 with 16 × 16 patches was the best choice.

Inspired by Claw U-Net [4], Yao et al. [17] proposed a new network model named TransClaw U-net that patches were encoded based on feature mapping, similarly. The convolution part was used to extract shallow spatial features to facilitate the recovery of image resolution after upsampling. The global context and self-attention mechanism from the Transformer make the segmentation effects more accurate. In addition, they introduced a claw structure to the decoder, which means they fused the shallow feature information, the upsampling parts, and the decoding parts. Experiments on the Synapse dataset demonstrate that the segmentation results were better than TransUNet [13] in multiple organs including the left kidney, right kidney, liver, pancreas and spleen.

Xu et al. [48] introduced LeViT [49] as a new encoder to propose LeViT-UNet which is the first medical image segmentation model with transformer blocks for balancing accuracy and speed. For LeViT, the transformer architecture was used to improve the speed. Unlike the vision transformer, they redesigned the attention-MLP block and added attention bias instead of a positional embedding to ensure positional information. It can be seen that LeViT-UNet achieved 78.53% Dice than TransUNet [13] on the Synapse multi-organ CT dataset.

CNN-transformer as decoder: Typically, transformer blocks are put in encoders to capture global features and build long-range relationships. However, Petit et al. [50] placed transformer blocks in the decoder to recover fine spatial and semantic information using Multi-Head Cross-Attention (MHCA) modules. The new model, named U-Transformer, achieved 88.08% Dice and 78.50% Dice on Internal Multi-Organ (IMO) dataset and TCIA pancreas dataset, respectively.

other: Although the transformer compensates for the shortcomings of CNN, it introduces a huge computational overhead, especially for 3D images. So Wang et al. [19] found that the previous network models mostly added transformer modules to the encoder or decoder of U-Net. However, it is not that encoder and decoder of U-Net have too many errors, but the simple skip connection causes the segmentation performance failure to improve. To handle this problem for the image segmentation task, they proposed UCTransNet which the CTrans replace original skip connections to better connect the encoder and decoder. The CTrans consists of Channel-wise Cross Fusion Transformer (CCT) for encoder feature transformation and Channel-wise Cross Attention (CCA) for feature fusion in the decoder. After embedding the multi-scale feature, tokens were then sent into the multi-head channel cross-attention module which the attention operation along the channel-axis. Finally, they designed the Multi-Layer

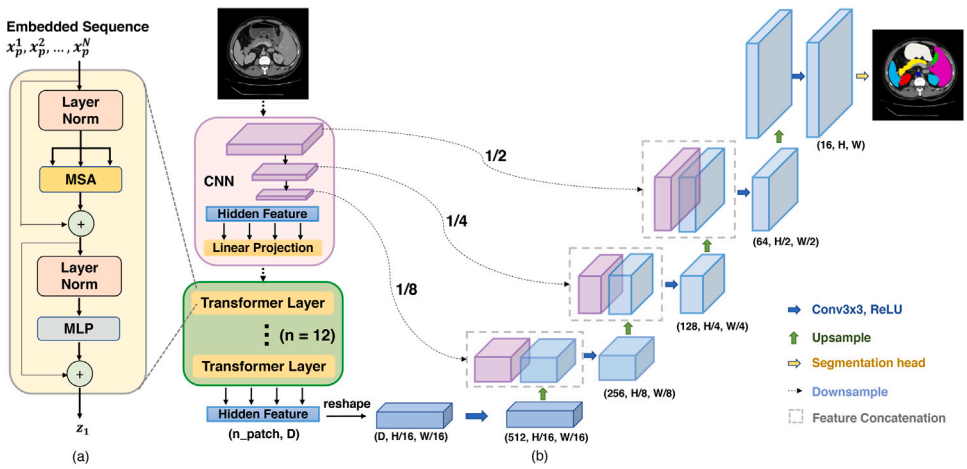

Fig. 5. The overview architecture of the TransUNet.
Source: Figure from [13].

Table 1
Analysis of abdominal organ segmentation methods. The dice value comes from the experimental results in this model, and "better than" is only limited to the data obtained in this experiment. ("U-based" denotes those Unet-based models. "Pos." indicates position of transformer structure in the model. "BL" expresses "bottleneck", "En" means encoder part, "De" denotes encoder part, "SC" represents skip connection. "Re-Trans" indicates a new module redesigned on the basis of a transformer encoder. "better than" represents better qualitative indicators. The dice is the average dice value.).

	Name	Data	Area	2D/3D	Pos.	Highlight	Dice	Better than
U-based	TransUNet	Synapse [43]	multi-organ	2D	En	CUP	77.48%	U-Net (74.68%)
	TransClaw U-net	Synapse [43]	multi-organ	2D	En	Claw U-Net	78.09%	TransUNet (77.48%)
	LeViT-UNet	Synapse [43]	multi-organ	2D	En	LeViT	78.53%	TransUNet (77.48%)
	U-Transformer	IMO	multi-organ	2D	De	MHCA	88.08%	U-Net (86.78%)
	UCTransNet	Synapse [43]	multi-organ	2D	SC	CCT (Re-Trans) CCA	78.23%	TransUNet (77.48%)
	MT-Unet	Synapse [43]	multi-organ	2D	En, De, BL	MTM (Re-Trans) LGG-SA	78.59%	TransUNet (77.48%) TransClaw U-net (78.09%)
	MISSFormer	Synapse [43]	multi-organ	2D	En, De, SC	ETB (Re-Trans) ETCB (Re-Trans)	81.96%	TransUNet (77.48%) Swin-Unet (79.13%)
	CoTr	Synapse [43]	multi-organ	3D	SC	Multi-Scale DeTrans (Re-Trans)	85.00%	TransUnet (84.2%)
other	CST	Private	tumor	2D	pure	Multi-Task	90.90%	U-Net (81.9%)
	Pollastri et al. [44]	PMUB [45]	prostate	3D	–	MSB image block	91.60%	V-Net (90.10%) U-Net3D (90.10%)
	TransFuse	MSD [46]	prostate	2D, 3D	–	BiFusion	76.39%	nnU-net (73.33%)
	USST	Synapse [43]	multi-organ	2D, 3D	–	self-supervised	84.99%	DINO [47] (76.31%)

Perceptron (MLP) at the end of CCT. Extensive experiments on Synaps dataset with the Dice reached 78.23% validating the efficacy of CCT and CCA. The experimental results show that UCTransNet outperforms TransUNet [13].

In fact, the vision transformer has a few flaws. The self-attention mechanism does not take into account the potential correlation between samples, so the researchers modified it and presented Mixed Transformer Module (MTM) to construct a hybrid model called MT-UNet [18]. They designed Local-Global Gaussian-Weighted Self-Attention (LGG-SA) to replace multi-head attention and used external attention [51] instead of MLP. Therefore, not only does MT-UNet focus on the correlation between samples, but also incorporates local–global information and reduces calculation requirements. Wang et al. placed these MTMs in the deep layers of the encoder and decoder to minimize computation overhead while in the shallow layers, convolutional layers are still used to preserve high-resolution information. The segmentation performed on multiple organs of the abdomen was better than the above models such as TransUNet [13] and TransClaw U-net [17], in which the pancreatic segmentation performance was significantly improved with a Dice of 59.46%.

As for modifying the transformer structure, Huang et al. [52] also developed a new model named MISSFormer. In previous studies, researchers used transformer blocks for low-resolution feature maps to reduce computational overhead, but Huang et al. developed Efficient Self-Attention using the spatial reduction rate for high-resolution features. Additionally, they added depth-wise convolutions and residual connections between the fully connected layers to solve the defect that local features cannot be effectively extracted. They also replaced the original skip connections with Enhanced Transformer Context Bridges (ETCB) to combine multi-scale information effectively. Unlike UCTransNet [19], they not only replaced the skip connections, but also included the Enhanced Transformer Block (ETB) in the encoder and decoder. Experiment on Synapse data, the Dice of MISSFormer model reached 81.96%. The results show that its segmentation effect was better than TransUNet [13] and Swin-Unet [15].

Xie et al. [21] proposed the 3D network model CoTr, which is the first transformer-based model on the volumetric data. In the same way as UCTransNet [19], they connected CNN-encoder and decoder using an improved transformer, DeTrans, which introduces the multi-scale deformable self-attention (MS-DMSA) mechanism to focus on key areas. This reduced computational complexity and made multi-scale feature maps more tractable. In addition, for 3D segmentation, Xie et al. introduced 3D position coding to avoid spatial information loss. Not only the segmentation effect is improved with 85.0% Dice, but also the value of parameters is only 41.9 M.

3.1.2. *Transformer based on other models*

without structural modification: In addition to the above mentioned model-based on the combination of U-Net [1], there are many

studies about transformer-based on other model for medical image segmentation. Zhang et al. [20] first combined transformer and CNN in a parallel style to reduce the depth of the network, which solved the problem of detail feature reduction. In transformer branch, the features were extracted from global to local. In another branch, the CNN module captured features from local to global. To effectively fuse the features from these two branches, the BiFusion module that can selectively fuse the information has been designed to effectively capture low-level spatial features and high-level semantic information. In the BiFusion module, the Squeeze-and-Excitation (SE) module was utilized to process feature maps from the transformer branch, enhancing the global features. Noise interference information extracted by the CNN branch was suppressed by spatial attention to prevent over-segmentation. Compared with nnU-net [6] in the Medical Segmentation Decathlon (MSD) competition, TransFuse-S, with ResNet-34 (R34) and DeiT-Small (DeiT-S) as the CNN branch backbone, reduced the number of parameters by about 41% with the value is only 26.30M and achieved good segmentation results.

Driven by the characteristic of medical images, Sui et al. [53] proposed a novel transfer learning protocol named CST to perform segmentation and detection tasks. This multitask framework included a segmentation block and a detection block. We mainly describe the segmentation block. Patches were fed into a pure-transformer structure, based on vision transformer blocks, which included a transformer encoder and a tumor mask transformer. Then we got a segmented tumor image from a transformer encoder. In the tumor segmentation tasks of the colorectal region, the accuracy outperformed U-Net [1] and FCN [54].

with structural modification: The previous models used 2D methods that are based on 2D slices from a 3D prostate MRI scan, while most medical images are 3D, so segmentations from 2D convolutions on 3D data are sometimes not satisfactory. In order to prevent the loss of spatial information during 3D slicing, Pollastri et al. [44] developed a 3D multi-scale neural network based on ResNet3D [55]. They first got multi-scale features from a feature extractor and Multi-Scale Block (MSB), then Pollastri et al. still used a transformer encoder with Multi-Head attention, but the positional encoding does not exist in the attention unlike original transformer. Finally, they utilized a decoder to reconstruct original spatial dimensions. Extensive training and testing on the Prostate-MRI-US-Biopsy (PMUB) [45] dataset prove that 3D architectures are better than 2D architectures for medical image datasets.

There are 2D images as well as 3D in medical images. To overcome the dimensional barrier for self-supervised learning, Xie et al. [39] proposed the USST framework. The USST had a dual-path architecture which includes Pyramid Transformer U-Net (PTU) module. The PTU encoder and PTU decoder consist of a Switchable Patch Embed (SPE) layer and transformer modules. The SPE can switch 2D patches embed or 3D patches embed according to the input dimension. For processing high-resolution feature maps, they introduced a spatial-reduction attention (SRA) layer [56] which added a spatial reduction layer before multi-head self-attention. The excellent performance proved that the PTU decoder has a stronger ability of decoding than the pure CNN decoder. In the pre-training stage, they used the alternate input strategy of 2D and 3D images, and when tested, excellent segmentation results were obtained in the lung segmentation, regardless of the time 2D input or 3D input.

3.2. Heart segmentation

Cardiovascular disease has one of the high mortality rates and morbidity rates in the world. Heart segmentation is critical for adjuvant treatment of cardiovascular disease since it can help doctors analyze the progression of the disease. The heart segmentation is usually divided into left ventricle blood cavity (LV), myocardium of the left ventricle (Myo), right ventricle blood cavity (RV), left atrium blood cavity (LA), right atrium blood cavity (RA), ascending aorta (AA) and pulmonary artery (PA). However, the ventricular myocardial malformation and the complexity of apical and basal slice images increase the difficulty to heart segmentation [57]. The segmentation assisted by transformer can greatly reduce the difficulty of heart segmentation and improve the accuracy of segmentation. Table 2 summarized the transformer segmentation model on the heart.

3.2.1. Unet-based transformer

CNN-transformer as encoder: Yang et al. [23] introduced Convolutional Block Attention Module (CBAM) [62] to propose a new transformer segmentation model, TransNUNet, based on TransUNet [13]. In the encoder, TransNUNet maintained the same structure as TransUNet. In the upsampling stage, they used CBAM which consists of channel attention and spatial attention to enhance the feature map. Experimentally, TransNUNet attains a good result with 0.921 Dice on the dataset from the 2017 Multi-Modality Whole Heart Segmentation Challenge than TransUNet [13] with 0.914 Dice. In addition, experimental results also show that the transformer gives better segmentation results if there is a large amount of samples.

other: Gao et al. [63] proposed an Unet-based model, UTNet, to solve the problem of high computing cost. In previous studies, low-resolution feature maps were obtained by multiple downsampling before being used by the transformer, but they lacked detailed information in high-resolution maps. Therefore, Gao et al. implemented a transformer module on each layer except the first one. In addition, they developed efficient multi-head self-attention (E-MHSA) to reduce complexity and also implemented transformer decoders to recover the image. As for positional encoding, Gao et al. introduced a two-dimensional relative positional encoding to guarantee translation invariance. This model can effectively combine CNN with self attention for capturing long-range dependencies better and reducing the overall complexity in time and space. From the experimental results, the Dice of UTNet on the left ventricle, left ventricular myocardium and right ventricle reached 93.1%, 83.5 and 88.2%, respectively. Not only that, UTNet also can segment the boundary more accurately. After that, Gao et al. [22] continued to propose a network model UTnetV2 based on a multi-scale transformer for medical image segmentation. They keep the idea that only the first layer used a convolutional stem, and then they designed a bidirectional transformer block(B-MHA) that is placed in the encoder and decoder. The B-MHA was designed to facilitate the fusion of global multi-scale feature information and reduce the amount of computation by retaining useful tokens. In B-MHA, they adopted the way of depth-wise separable convolution to obtain spatial information by depth-wise convolution and channel information by point-wise convolution. In order to better integrate multi-scale semantic maps, they replaced the original skip connections with a few transformer blocks. For 2D input, UTNetV2 get 12.8M parameters and 91.73% Dice, better than TransUNet [13], Swin-UNet [15] and UTNet [63]. Especially for 3D input, UTNetV2 with 15.3M parameters and 92.14% Dice outperforms UNETR [28] with 92.4M parameters and 87.15% Dice. In UTNet and UTNetV2, attention modules in the original transformer structure are redesigned, as shown in Figs. 6 and 7.

To address the problem of inefficiency in large networks, Deng et al. [64] developed TransBridge to reduce the calculation cost by shortening the length of the token sequence. Then they divided patches from the perspective of multi-channel feature maps. On layers 2 through 5, they replaced the original skip connections with a new transformer encoder to better integrate the feature maps derived from the CNN layers. Without reducing the segmentation effect, the EchoNet-Dynamic (E-D) dataset [60] shows that the total number of parameters of the base scale TransBridge (TransBridge-B) is only 3.49M, which is 78.7% smaller than the CoTr [21] model mentioned earlier, and the embedding layer param accounts for only 0.17M.

In 3D images, Wu et al. [25] introduced local scope modules (LSMs), global scope modules (GSMs) and dynamic position encoding blocks

Table 2
Analysis of heart segmentation methods. The dice value comes from the experimental results in this model, and "better than" is only limited to the data obtained in this experiment. ("U-based" denotes those Unet-based models. "Pos." indicates position of transformer structure in the model. "BL" expresses "bottleneck", "En" means encoder part, "De" denotes encoder part, "SC" represents skip connection. "Re-Trans" indicates a new module redesigned on the basis of a transformer encoder, "Re-SwinTrans" indicates a new module redesigned on the basis of a Swin transformer block. "SA" means short-axis images as inputs. "better than" represents better qualitative indicators. The dice is the average dice value.).

	Name	Data	Area	2D/3D	Pos.	Highlight	Dice	Better than
U-based	TransNUNet	By challenge [58]	Whole heart	2D	En	CBAM	92.10%	TransUNet (91.40%)
	UTNet	Private	LV, Myo, RV	2D	En, De	E-MHSA (Re-Trans)	88.30%	U-Net (86.40%)
	UTNetV2	ACDC [59]	LV, Myo, RV	2D, 3D	En, De, SC	Multi-Scale B-MHA (Re-Trans)	92.14%	UNETR (87.15%) UTNet (91.52%)
	TransBridge	E-D [60]	LV	2D	SC	few parameters	91.64%	CoTr (91.29%)
	D-Former	ACDC [59]	LV, Myo, RV	3D	En, De	LSM (Re-Trans) GSM (Re-Trans) DPE few parameters	92.29%	TransUNet (89.71%) Swin-UNet (90.00%) LeVit-Unet (90.32%) nnFormer (91.78%) MISSFormer (87.90%)
other	Swin-Unet	ACDC [59]	LV, Myo, RV	2D	pure	Swin Transformer	90.00%	TransUNet (89.71%)
	ECT-NAS	ACDC [59]	LV, Myo, RV	2D	–	LiteTrans (Re-Trans)	89.83%	TransUNet (89.71%)
	TransFusion	M&Ms-2 [61]	LV, Myo, RV	2D, 3D	–	DiFA (Re-Trans) Multi-View Multi-Scale	87.58% (SA)	TransUNet (85.09%) MCTrans (86.17%) UTNet (86.10%)
	Tempera	M&Ms-2 [61]	RV	2D, 3D	–	Multi-View GST (Re-Trans)	89.60% (SA)	–
	nnFormer	ACDC [59]	LV, Myo, RV	3D	pure	GV-MSA (Re-SwinTrans) LV-MSA (Re-SwinTrans)	92.06%	UNETR (88.61%) TransUNet (89.71%) Swin-Unet (90.00%)

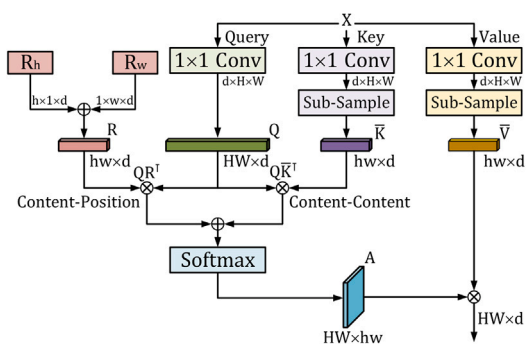

Fig. 6. The overview architecture of the efficient multi-head self-attention of UTNet. *Source:* Figure from [63].

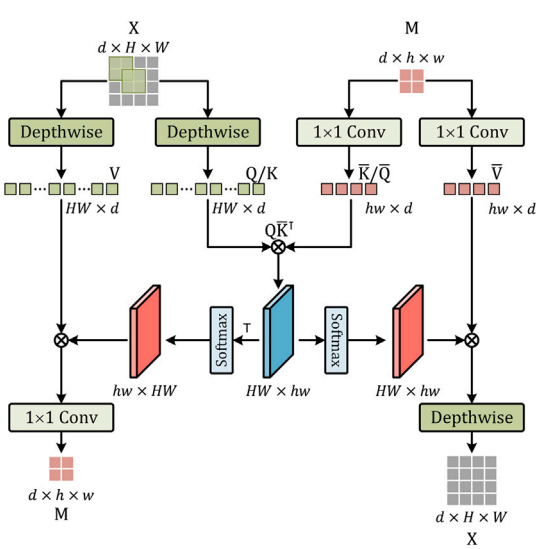

Fig. 7. The overview architecture of the bidirectional attention of UTNetV2. *Source:* Figure from [22].

(DPEs) to form D-Former for segmentation. In order to reduce the computational complexity, LS-MSA only processed each local unit and GS-MSA utilized a dilated method to handle connections between units. In addition, they added 3D depth-wise convolution to the dynamic position encoding block, which can reduce the calculation cost. D-Former obtains the best segmentation accuracy with 92.29% on average DSC, 91.33% on RV, 89.60% on Myo, 95.93% on LV than TransUNet [13], Swin-UNet [15], LeVit-Unet [48], nnFormer [24] and MISSFormer [52].

3.2.2. Transformer based on other models

with structural modification: Instead of using FCN [54] or a combination of transformer and convolution, Cao et al. [15] proposed the first pure transformer-based U-type architecture, Swin-Unet, which introduced Swin transformer blocks [29] as encoder, decoder and bottleneck, as shown in Fig. 8. In the pure transformer structure, they used patch a merging layer for down-sampling and a patch expanding layer for up-sampling. In addition, they kept the original jump connection to process extracted features. Extensive experimentations on ACDC dataset show the effectiveness of their proposed approach with an accuracy of 90.00%. After that, Wu et al. [65] made extensive experiments on the ACDC dataset by Swin-Unet [15] with R2Net [65], which used spatial attention, demonstrated that results are better than Swin-Unet without R2Net [65].

Xu et al. [66] adopted a multi-scale search strategy to find out CNN-Transformer architecture for segmenting more efficiently by ECT-NAS which used LiteTrans [67]. Two branches in LiteTrans, one is CNN and the other is Local-Global Self-Attention (LGSA), replaced the original multi-head self-attention in a transformer. In LGSA, they utilized depth-wise separable convolutions to reduce the amount of calculation. Extensive experimentations on ACDC dataset show ECT-NAS is better than TransUNet with 89.83% Dice.

In heart segmentation tasks, multi view method is more effective than single view. therefore, Liu et al. [68] proposed the Divergent Fusion Attention (DiFA) module and Multi-Scale Attention (MSA) to constitute a new transformer-based network model named TransFusion to construct semantic dependencies for different scales and views to better solve the more complex medical image segmentation tasks. A residual module and a transformer block both comprised the base module. However, in the transformer block, layer normalization was replaced by batch normalization and MLP was replaced by convolution. The DiFA was designed to fuse multi-view information and required

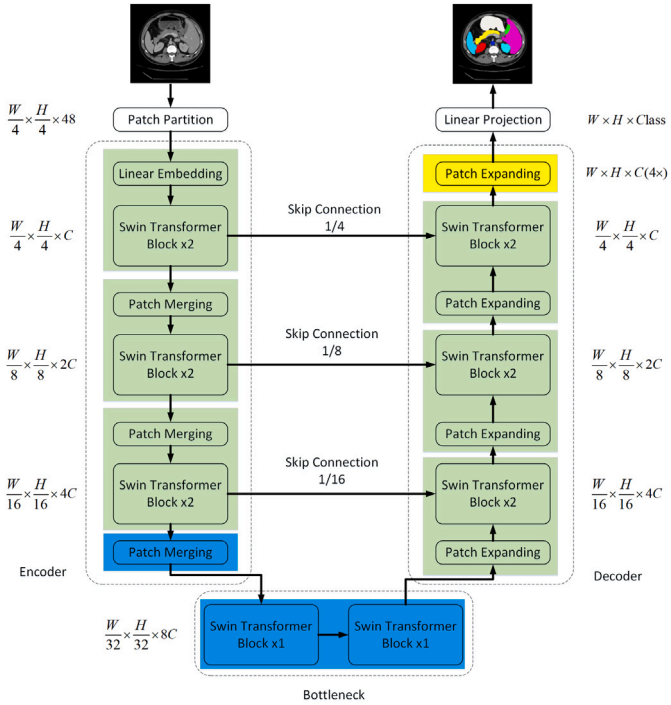

Fig. 8. The overview architecture of the Swin-Unet.
Source: Figure from [15].

information. Extensive experiments validate the efficacy of their multi-view method, and the segmentation effect of this model is better than TransUNet [13], MCTrans [69] and UTNet [63]. Furthermore, Galazis et al. [70] also used the idea of multiple views to propose a geometric spatial transformer multi-pass feature pyramid, Tempera. This model can handle both 2D and 3D images, and they used a Geometric target Spatial Transformer (GST) based on a spatial transformer [71] to obtain the relationship between different heart views, which facilitated the conversion between 2D and 3D images. Extensive experimentation on bSSFP CINE MRI dataset shows the effectiveness of their proposed approach with 0.836 Dice on short-axis (SA) cardiac images and 0.798 Dice on long-axis (LA) cardiac images.

Ultrasound(US) is a common modality for cardiac examination, but the signal-to-noise ratio of ultrasound images is low. Therefore, Ta et al. [72] proposed a motion tracking network that also used two spatial transformer blocks to output the morphed target image and the predicted target segmentation, respectively. They have done a lot of experiments with 0.95±0.01 Dice on the endocardium and 0.84±0.09 Dice on epicardium.

Compared with D-Former [25] and LiteTrans [67], Zhou et al. [24] adopted the local–global idea to modify the multi-head self-attention in transformer structure for 3D medical images, similarly. They proposed nnFormer introducing local transformer blocks in the encoder and decoder as well as global transformer blocks in the bottleneck to learn 3D volumes both locally and globally. In the global transformer and the local transformer, Zhou et al. designed Global Volume-based Multi-head Self-attention (GV-MSA) and Local Volume-based Multi-head Self-attention (LV-MSA) in place of Multi-head Self-attention, which greatly reduced computational complexity. Skip attention replaced the original skip connection to narrow the semantic gap between encoder and decoder. Extensive experimentations on the ACDC dataset show 90.94% Dice on the right ventricle blood cavity (RV), 89.58% Dice on the left ventricle (Myo) and 95.65% Dice on the left atrium blood cavity (LA). In addition, nnFormer had a certain improvement in boundary segmentation effect.

3.3. Brain segmentation

The brain is one of the most important organs in the human body, and a lesion in the brain is always very harmful to the body. According to the results of global cancer registration in 2020, there were 19.3 million new cancer cases, of which 308,102 were related to brain and nervous system [73]. Brain cancer is major cancer. Its incidence rate has been on the rise in recent decades [74]. Survival rate can vary by a number of factors, including the type of brain cancer, size and location of tumors, the effect of treatment after diagnosis, and recovery of the patient after being treated. With the help of the computer, the correct diagnosis will be increased and the spread of the disease can be curbed at an early stage. Therefore, brain segmentation is crucial for doctors to diagnose and treat the disease after the diagnosis is confirmed. In addition, brain segmentation also includes the segmentation of brain tissue, intracranial blood vessel, and brain cortical plate. Table 3 summarized the transformer segmentation model on the brain.

3.3.1. Unet-based transformer

transformer as encoder: In the task of 3D medical image segmentation, Hatamizadeh et al. [28] used transformer blocks as an encoder to design UNETR, the first model for feature extraction in the main encoder, as shown in Fig. 9. For input, they chosed the 3D patches for medical image segmentation. Then they chosed a combination of soft Dice loss and cross-entropy loss as loss function. Extensive experiments on the MSD dataset show that results achieve at 0.585 on enhancing tumor (ET), 0.789 Dice on whole tumor (WT) and 0.761 on tumor core (TC), similarly. UNETR has a higher boundary segmentation accuracy than most 2D models.

Subsequently, influenced by Swin transformer [40], Hatamizadeh et al. [29] used Swin transformer as an encoder to design new network model Swin UNETR. The 3D multi-modal MRI images with 4 channels were fed into the encoder, then segmentation output can be got by the decoder with residual block. On BraTS 2021 testing dataset, the results get 0.853 Dice on ET, 0.927 Dice on WT and 0.876 Dice on TC.

CNN-transformer as decoder: Li et al. [79] designed the window attention decoder to form a new transformer decoder. They put the WAD in the decoder and used bilinear interpolation for up-sampling. Extensive experimentations on MSD brain dataset show the effectiveness of WAD with 63.23% and 80.29%,80.73% on non-enhancing tumor, enhancing tumor and edema, respectively.

other: Driven by Swin transformer [40], Zhang et al. [26] redesigned a new model, S^2WinTOUnet, which introduced the filtering feature integration mechanism (FFIM) and the improved Star-shaped window transformer (S^2Win) in the decoder. The FFIM was designed for feature integration and parameter reduction. The Star-shaped window transformer can get global attention by capturing the attention of vertical lines and diagonals to improve segmentation accuracy. Because multi-scale features are needed, they adopted the LePE approach to make location encoding rather than relative positional encoding (RPE). The model can get 0.897 Dice on the LGG dataset and better divide boundaries.

Wang et al. [27] is the first one to use transformer in 3D CNN for segmentation of MRI brain tumors, as shown in Fig. 10. In TransBTS, firstly they captured spatial and depth information by the encoder consisting of 3D CNN, then the features were fed into the transformer layer and the decoder in turn. The Dice values for TransBTS on the BraTS2020 dataset are 78.73%, 90.09%, and 81.73% for ET, WT and TC, respectively.

More than that, MISSU [80], which was designed by Wang et al. had a better segmentation performance than TransBTS [27] and UNETR [28]. Similarly to the TransBTS model, they placed a transformer in the bottleneck. However, they developed an additional Multi-scale Fusing Block (MSF) based on atrous convolution to fuse multi-scale information.

Table 3
Analysis of brain segmentation methods. The dice value comes from the experimental results in this model, and "better than" is only limited to the data obtained in this experiment. ("U-based" denotes those Unet-based models. "Pos." indicates position of transformer structure in the model. "BL" expresses "bottleneck", "En" means encoder part, "De" denotes encoder part, "SC" represents skip connection. "Re-Trans" indicates a new module redesigned on the basis of a transformer encoder, "Re-SwinTrans" indicates a new module redesigned on the basis of a Swin transformer block. "better than" represents better qualitative indicators. The dice is the average dice value.).

	Name	Data	Area	2D/3D	Pos.	Highlight	Dice	Better than
U-based	S^2WinTOUnet	LGG [75,76]	tumor	2D	De, BL	FFIM S^2Win (Re-SwinTrans) Multi-Scale	89.70%	U-Net (86.40%)
	UNETR	MSD [46]	tumor	3D	En	3D patches	71.10%	TransUNet (64.40%) TransBTS (69.60%)
	Swin UNETR	BraTS2021	tumor	3D	En	3D Multi-Modal	91.30%	TransBTS (89.10%)
	TransBTS	BraTS2020	tumor	3D	BL	–	81.73%	3D U-Net (79.06%)
	MISSU	BraTS2019	tumor	3D	BL	Multi-Scale	80.14%	UNETR (60.62%) TransBTS (78.36%)
	BiTr-Unet	BraTS2021	tumor	3D	SC		74.22%	–
	VT-UNet	BraTS2021	tumor	3D	En, De, BL	VT-SW-MSA VT-W-MSA few parameters	88.07%	TransBTS (84.99%) UNETR (84.51%) nnFormer (86.56%)
other	HybridCTrm	MRBrainS [77]	tissue	2D	–	Multi-Modal	83.47%	HyperDenseNet (76.20%)
	SAEM	Private	vessel	3D	–	3D patches	95.15%	U-Net (88.42%)
	Karimi et al. [42]	dHCP [78]	cortical plate	3D	pure	3D patches	87.90%	UNet++ (86.00%)
	TranSiam	BraTS2020	tumor	3D	–	Multi-Modal TMM (Re-Trans)	89.34%	TransBTS (89.00%)

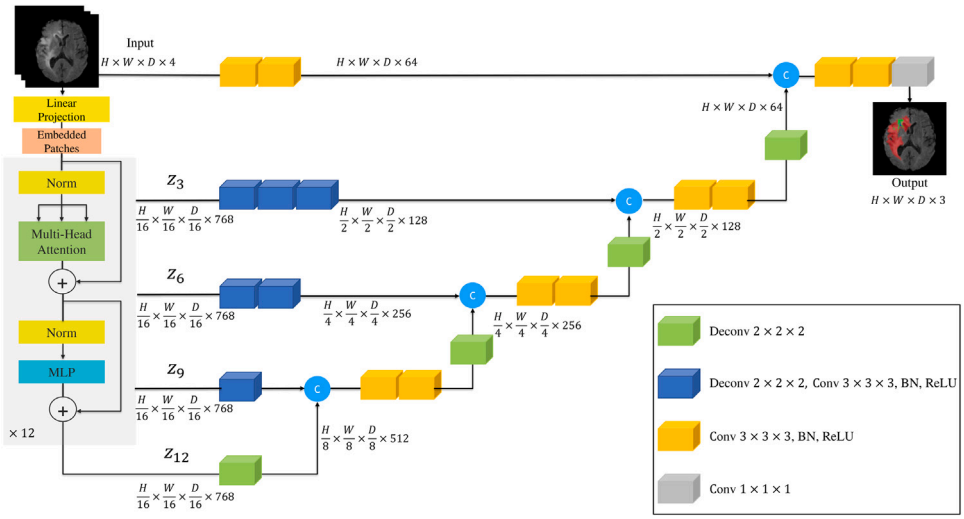

Fig. 9. The overview architecture of the UNETR.
Source: Figure from [28].

In the TransBTS [27] and UNETR [28] experiments, the TransBTS performs better on the BraTS dataset. Therefore, Jia et al. [30] have proposed a BiTr-Unet model using TransBTS as the core for segmenting brain tumors from multimodal MRI scans. They introduced the 3D CBAM into the encoder and changed the fourth to fifth-level skip connection which was replaced by the operation of linear projection, vision transformer block and feature mapping replacement. The result of the BraTS2021 testing data shows Dice of with 0.8874 on ET, 0.9257 on WT and 0.9350 on TC.

Peiris et al. [31] designed a new model for 3D tumor segmentation, VT-UNet, which used basic modules including volumetric transformer (VT) encoder blocks and 3D patch merging layers as an encoder to obtain local and global information The bottleneck and decoder were composed of basic modules including VT decoder blocks and 3D patch expanding layers. In VT encoder block and VT decoder block, they utilized volumetric transformer window based multi-head self-attention (VT-W-MSA) and volumetric transformer shifted window based multi-head self-attention (VT-SW-MSA) to conduct 3D windowing operations. Segmentation results on BraTS2021 data achieve 85.59% on ET, 91.20% Dice on WT and 87.41% on TC with only 20.8M parameters. VT-UNet-T, a tiny model with C = 48, has a smaller amount of parameters with 5.4M and the segmentation accuracy has not decreased much. According to these results, the segmentation performance of VT-UNet is better than TransBTS [27], UNETR [28] and nnFormer [24].

3.3.2. *Transformer based on other models*

without structural modification: The multimodal image is useful in extracting features from different views, obtaining more information, and achieving higher segmentation accuracy. Therefore, Sun et al. [32] designed a hybrid multimodal segmentation model HybridCTrm by single-path strategy and multipath strategy. In a single path, MRI-T1 and MRI-T2 are common as input firstly, then they are fed into a branch of the convolution block and a branch of the transformer block. However, in multipath, MRI-T1 was used as one input and MRI-T2 was used as another input. As for these branches, the convolution module captures local information and accelerates gradient convergence, while the transformer extracts global features and prevents overfitting and local optimization in the later stage of training. Extensive experiments on the MRBrainS dataset, the HybridCTrm-Single achieve 88.54%, 85.30% and 75.09% on three brain tissues including white matter (WM), gray matter (GM), and cerebrospinal fluid (CSF), respectively and HybridCTrm-Multi at 88.37% on WM, 85.52% on GM and 76.53% on CSF.

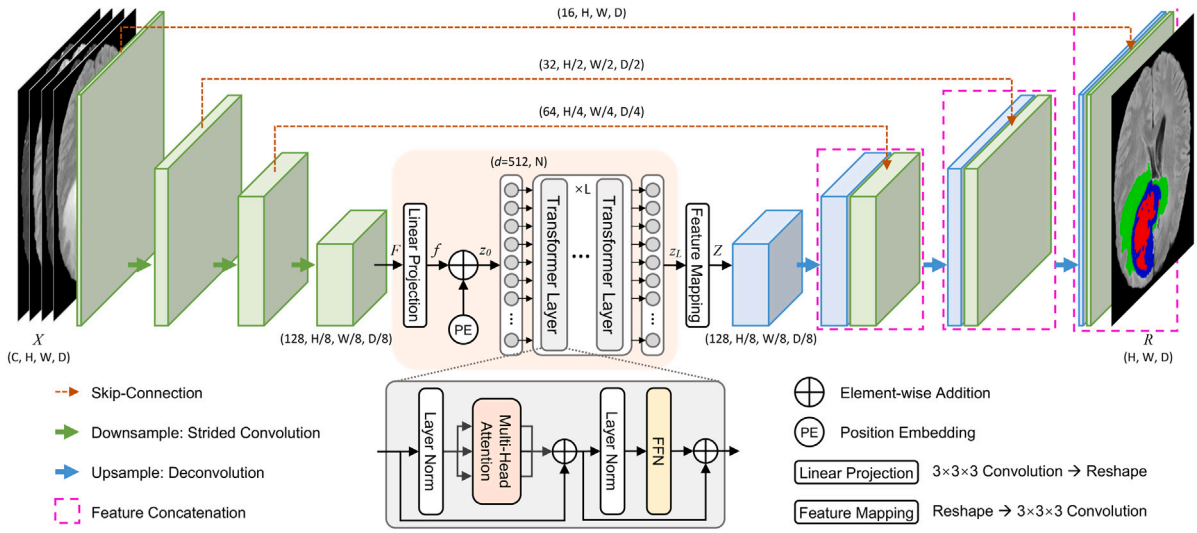

Fig. 10. The overview architecture of the TransBTS.
Source: Figure from [27].

Karimi et al. [42] proposed the first convolution free deep neural network for medical image segmentation. This network has not any convolution structure, they firstly extracted feature images, then split them into 3D patches. After each of the patches was flattened and embedded, the segmentation of the center patch was predicted. Especially in the field of medical images, there are few labeled data, which can better reflect the advantages of this model. Better segmentation performance can be got by pretrain than some models in a few labeled data. Extensive experiments on Brain cortical plate dataset, the Dice is 0.879.

with structural modification: Although the addition of a transformer module greatly improved the segmentation effect, it required a lot of calculation. Therefore, inspired by the transformer, Li et al. [33] proposed a self-attention encoder module (SAEM) and removed the positional embedding to reduce the amount of calculation and the performance of segmentation was still excellent. In addition, they also adopted a way of sliced mosaic permutation to solve the problem of less medical image data and rich the feature maps. According to the experimental results, the Dice of the model was 95.15% and mIoU was 91.66%.

Unlike HybridCTrm [32], Li et al. [81] modified the transformer structure to form ICMT blocks for multimodal images. Before multi-head self-attention processing, these patches were fed into depthwise convolution for reducing information loss. In the original MLP part, it was composed of two convolution layers as a feature extractor. In order to deal with multi-modal features, TranSiam [81] adopted the dual path mode and designed a TMM block including cross-attention and self-attention for establishing a correlation between multimodal features. Experiments on BraTS 2019 validation dataset and BraTS 2020 validation dataset, proved the effectiveness of ICMT and TMM.

3.4. Lung segmentation

Lung cancer, which is mainly divided into non-small cell lung cancer (NSCLC) and small cell lung cancer (SCLC), is caused by malignant tumors from the bronchial mucosa or glands of the lung with the highest mortality rate in the world. According to the global cancer statistics for 2020, lung cancer is the second most commonly diagnosed cancer, accounting for 11.4% of the diagnosed cancers and 18.0% of the total cancer deaths in the world. After the diagnosis of lung cancer, if not effectively treated, the survival rate of lung cancer patients diagnosed from 2010 to 2014 is only 10% to 20% five years in most countries [73]. Early detection and treatment of lung cancer can prolong the survival time of lung cancer patients. Lung segmentation mainly includes pulmonary parenchymal segmentation, pulmonary nodal segmentation, and pulmonary vascular segmentation which can help doctors treat patients more effectively. Table 4 summarized the transformer segmentation model on the lung. In the research of lung segmentation, based on the U-Net model, researchers generally placed transformer blocks in a bottleneck and skip connections.

3.4.1. Unet-based transformer

transformer in bottleneck: Chen et al. [34] used a multi-level guided attention to segment medical images accurately with different imaging modes and multi-scale skip connection in the TransAttUnet model to leverage multi-scale contextual information, which effectively enhanced the model segmentation capability, as shown in Fig. 11. In the Self-aware Attention (SAA) Module, they firstly used transformer self attention (TSA) and global spatial attention (GSA) to capture contextual information and spatial relationships, then they best combined original features and attentional features by dynamic programming method. The excellent performance on the Clean-CC-CCII dataset proved that TransAttUnet has a strong ability for pneumonia lesion segmentation with 86.57% Dice and 99.38% accuracy. Sun et al. [83] segmented lesions of COVID-19 on the CC-CCII dataset, extracted local features through the combination of Atrous evolution and CBAM, and extracted global features at the bottom of U-Net using Swin transformer to reduce the number of parameters. Although this work did not change the original results of the transformer in their design, they achieved a better segmentation effect than TransUNet.

To better segment 3D medical images, Guo et al. [36] added the transformer module at the bottom of the U-shaped structure to enable the model to adapt to images with varying slice spacing. They modified the multi-head self-attention module and replaced MLP with two convolution layers in transformer. In lung cancer segmentation, the TSFMUNet model had a Dice coefficient of 0.8717 on the lung cancer dataset [46] published by Medical Segmentation Decathlon.

Yan et al. [37] introduced an axial fusion mechanism to propose AFTer-UNet for 3D images. They used an axial fusion transformer encoder in a single slice and neighboring slices to fuse contextual information of intra-slice and inter-slice and reduce the computational complexity. In an axial fusion transformer, firstly the inter-slice sequence was fed into the transformer, and then the intra-slice sequence was also fed into the transformer. On the in-house thorax-85 dataset, the Dice coefficients reached 97.80% and 97.90% in the left and right lung segmentation tasks, respectively.

Table 4
Analysis of lung segmentation methods. The dice value comes from the experimental results in this model, and "better than" is only limited to the data obtained in this experiment. ("U-based" denotes those Unet-based models. "Pos." indicates position of transformer structure in the model. "BL" expresses "bottleneck", "En" means encoder part, "De" denotes encoder part, "SC" represents skip connection. "Re-Trans" indicates a new module redesigned on the basis of a transformer encoder, "Re-SwinTrans" indicates a new module redesigned on the basis of a Swin transformer block. The dice is the average dice value.).

	Name	Data	Area	2D/3D	Pos.	Highlight	Dice	Better than
U-based	TransAttUnet	Clean-CC-CCII	lesion	2D	BL	GSA (Re-Trans)	86.57%	U-Net (82.39%)
	CCAT-NET	COVID-19 [82]	lesion	2D	En,De	Multi-Scale semi-supervision Re-SwinTrans	65.06%	Swin-Unet (57.66%)
	Sun et al. [83]	CC-CCII [84]	lesion	2D	BL	CBAM	88.27%	TransUNet (87.31%)
	HT-Net	LUNA	nodule	2D	SC	PAA (Re-Trans)	98.91%	U-Net (95.92%)
	TSFMUNet	MSD [46]	cancer	3D	BL	Re-Trans	87.17%	3D U-Net (77.44%)
	AFTer-UNet	Thorax-85 [85]	lung(L)	3D	BL	few parameters axial fusion	97.80%	CoTr (97.47%) TransUNet (97.63%) Swin-Unet (97.64%)
other	MMSASegNet	Private	tumor	2D	–	Multi-Modal	85.40%	HDUNet (82.90%)
	T-AutoML	MSD (2018)	lesion	3D	–	NAS [86]	75.33%	nnU-net (73.97%)

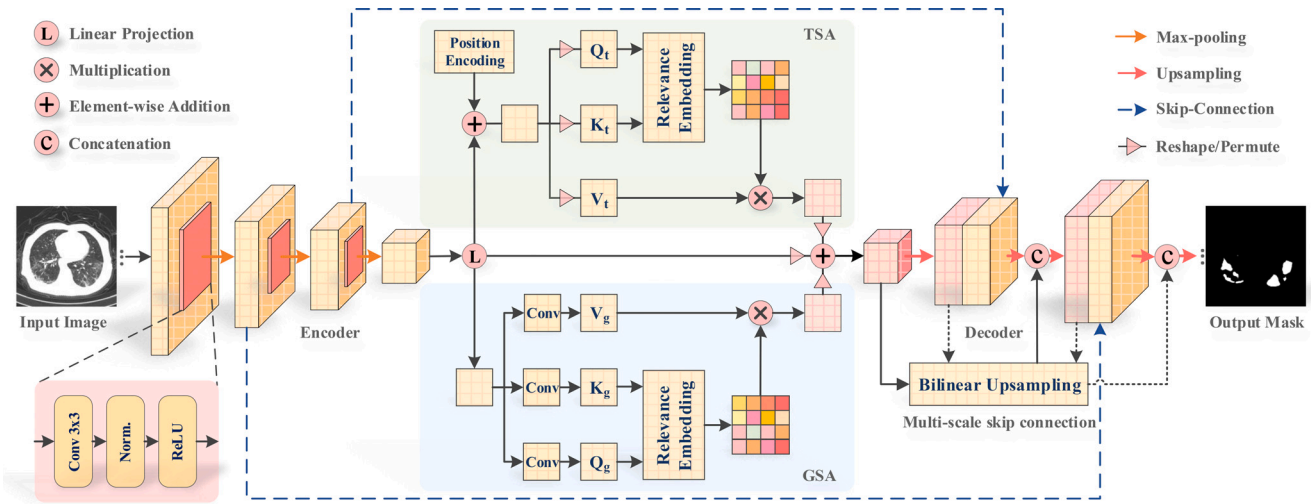

Fig. 11. The overview architecture of the TransAttUnet.
Source: Figure from [34].

transformer in skip connections: Ma et al. [35] proposed HT-Net model, leveraging the transformer mechanism in the 2nd layer to the 4th layer of skip connections, which mainly includes Residual Atrous Pyramid Pooling (RAPP) module, Position-sensitive Axial Attention (PAA) module and Hierarchical Context-attention (HCA) module. In RAPP module, they added a residual mechanism to fuse original features for extracting multi-scale features better. In the PAA module, they used convolutions and axial self-attention transformer blocks which included height-axis multi-head attention module and width-axis multi-head attention module to establish axial attention for the position. However, the axial attention mechanism of the transformer can take a little loss. To address this problem, they designed the HCA module following the PAA module. Experimentally, on the LUNA dataset with a resolution of 512 × 512, HT-Net attains a new SOTA result with 0.9944±0.0204 accuracy and 0.9891 Dice.

other: To make the best use of unlabeled data, Liu et al. [87] created CCAT-NET, which uses a semi-supervised framework to achieve automatic segmentation of COVID-19 lesions. The deep component of the encoder and decoder is where the transformer construction is designed. The Swin transformer's structure has been altered in the CCAT-NET design. The worthless channel data that W-MSA and SW-MSA have collected is filtered using the SE module [88]. The qualitative indicators of CCAT-NET semi-supervision (65.06%) performed better than supervision (63.16%) in the COVID-19-P1110 dataset [82], which contains 785 CT images.

3.4.2. Transformer based on other models

without structural modification: Yang et al. [89] proposed a new automatic learning algorithm T-AutoML to find the most suitable hyperparameters and data enhancement while searching for the best structure. They proposed a new search space based on SpineNet and used the modern transformer model to improve the search capability. On the 3D images, T-AutoML segmented Dice of 0.7650 for the lung lesions.

with structural modification: Li et al. [38] proposed a multi-modal segmentation model for lung tumor segmentation, MMSASegNet, which can extract image features from different modal inputs. They used spatial transformer networks to obtain multimodal feature maps for spatial structure matching and tumor segmentation. Empirically, MMSASegNet achieved 0.854(±0.074) Dice and 0.862 precision. To get good segmentation results, it was not only necessary to have excellent segmentation models, but also parameter settings, data influence, etc.

4. Quantitative comparison

In this section, we have summarized some segmentation results of models from previous experiments. The experimental results of different models will be shown on Section 4.1. Furthermore, to ensure fairness, we applied some open-source solutions for comparison on two public datasets. The experimental results will be presented in Section 4.2.3.

Table 5
Comparison of quantitative results. The experimental results are from [25], [25], [31], [37], respectively. (The dice is the average dice value.).

Name	Area	Dataset	Dice
TransUNet	abdomen	Synapse [43]	77.48%
TransClaw U-Net			78.09%
LeVit-Unet			78.53%
Swin-Unet			79.13%
MISSFormer			81.96%
nnFormer			87.40%
D-Former			88.83%
MISSFormer	heart	ACDC [59]	87.90%
TransUNet			89.71%
Swin-Unet			90.00%
LeVit-Unet			90.32%
nnFormer			91.78%
D-Former			92.29%
UNETR	brain	BraTS 2021	84.51%
TransBTS			84.99%
nnFormer			86.56%
VT-UNet			88.07%
Swin-Unet	lung	Thorax-85 [85]	91.26%
TransUNet			91.38%
AFTer-UNet			92.32%

4.1. Previous experimental results

We summarized the segmentation results of transformer model on abdomen, heart, brain and lung from [25,25,31,37], as shown in Table 5. D-Former obtained the highest Dice value in the comparison model on Synapse and ACDC datasets. At the same time, we also found that different models have different performance in different experiments. Swin-unet performed better than TransUNet on the Synapse dataset, but not as well as TransUNet on the Thorax-85 dataset.

4.2. Our experiments on public datasets

In order to make different models more comparable, this work used Swin-Unet, LeViT-UNet, UCTransNet, TransAttUnet, UTNet, TransUNet and UTNetV2 to carry out experiments on two common datasets, and gave a comparison and analysis.

4.2.1. Implementation details

Seven different models were trained on an NVIDIA RTX A6000, with a learning rate of 2e-4, batch size of 16, and image size of 224 × 224. The maximum epoch was set to 200, and an early stop mechanism was also implemented. If the Dice coefficient did not increase after 50 consecutive epochs of validation, the training was stopped. The traditional WeightedDiceBCE loss function was used for all experiments. Finally, the performance of the models was evaluated using Dice and IoU metrics, as well as the number of parameters (#Param) and the number of computations (FLOPs).

4.2.2. Datasets

For organ segmentation, there are significant variations between cases, especially in pancreas. The boundary of the pancreas in the CT image is relatively blurred, which leads to difficulty in segmentation. The dependence on long distance is necessary. Therefore, this work conducted pancreas segmentation experiments on the MSD dataset to compare different transformer models. In addition to organ segmentation, the lesion segmentation experiment was also carried out, and the segmentation dataset of non-small cell lung cancer (NSCLC) was selected.

MSD dataset: This dataset comes from [90]. This work selected 165 cases in the MSD dataset, including 5000 pancreatic slices, and divided the training set, verification set, and test set according to the ratio of 80%:10%:10%. Furthermore, the window width was established at 400 Hu and the window level was set at 60 Hu, and the slice size was resized from 512 × 512 to 224 × 224.

NSCLC dataset: This dataset comes from [91] which is used for segmentation of non-small cell lung cancer. In this work, 5120 slices were selected from 300 patients, 80% of the slices were used as training sets, 10% of the slices were used for verification, and 10% of the slices were used as test sets. In addition, all slices resized to 224 × 224. The NSCLC dataset was set the window width to 1500 Hu, the window level to −500 Hu.

Table 6
Experimental results with quantitative comparison and parameter comparison on MSD datasets. (Best results are bolded.).

Name	Dice (%)	IoU (%)	#Param	FLOPs
Swin-Unet [15]	63.79	48.82	41.38M	**8.64G**
Swin-Unet[a] [15]	76.42	64.17	41.38M	**8.64G**
LeViT-UNet[a] [48]	76.68	64.62	52.15M	25.40G
UCTransNet [19]	77.31	65.75	66.44M	32.93G
LeViT-UNet [48]	79.01	67.56	52.15M	25.40G
TransAttUnet [34]	80.53	69.58	25.97M	67.81G
UTNet [63]	80.59	70.45	**14.42M**	15.67G
TransUNet[a] [13]	80.97	70.47	105.28M	24.60G
TransUNet [13]	81.07	70.66	105.28M	24.60G
UTNetV2 [22]	**82.23**	**72.25**	28.07M	16.81G

[a]Means using the pre-training weight given in the original work.

Table 7
Experimental results with quantitative comparison and parameter comparison on NSCLC datasets. (Best results are bolded.).

Name	Dice (%)	IoU (%)	#Param	FLOPs
Swin-Unet [15]	37.15	26.54	41.38M	**8.64G**
LeViT-UNet [48]	51.90	41.51	52.15M	25.40G
LeViT-UNet[a] [48]	55.63	45.27	52.15M	25.40G
UCTransNet [19]	57.17	46.91	66.44M	32.93G
Swin-Unet[a] [15]	58.05	46.65	41.38M	**8.64G**
TransAttUnet [34]	58.34	48.47	25.97M	67.81G
UTNet [63]	58.72	48.27	**14.42M**	15.67G
UTNetV2[22]	59.36	49.13	28.07M	16.81G
TransUNet*[13]	59.54	49.30	105.28M	24.60G
TransUNet [13]	**60.71**	**49.80**	105.28M	24.60G

[a]Means using the pre-training weight given in the original work.

4.2.3. Results

Organ segmentation and lesion segmentation are common segmentation tasks of medical images. Table 6 is the comparison of quantitative results of different transformer models used for pancreas segmentation on MSD dataset. It can be seen that UTNetV2 [22] performs best (Dice: 82.23%, IoU: 72.25%) in the pancreas segmentation task. Moreover, UTNet [63] and UTNetV2 [22] have redesigned the structure of the transformer and adopted the idea of reducing the number of tokens to reduce the memory and computation costs. However, UTNet uses the down-sampling method in the multi-head attention mechanism, resulting in partial information loss, which also explains why the Dice value of UTNet is lower than UTNetV2. In the task of non-small cell lung cancer segmentation, as shown in Table 7, the TransUNet [13] model shows the best segmentation performance (Dice: 60.71%, IoU: 49.80%), which obtains enough detailed information and prior knowledge through CNN at the shallow layer of the encoder, and introduces a 12-layer transformer structure at the deep layer. It can be seen that high-resolution context information plays an important role in segmentation. Too many transformer structures can improve performance, but also increase many parameters. TransUNet has the largest number of parameters at 105M, significantly more than UTNet (14.42M) and UTNetV2 (28.07M). On the other hand, for transformer models, 4096 images are insufficient for training. This work showed that not all pre-training is effective for medical image segmentation tasks. There exists a certain gap between natural images in ImageNet

Table 8
Analysis of 3D segmentation performance. (The data is limited to the experiment in the original paper, the dice is the average dice value of multi parts.).

Name	Area	Imaging	dataset	Dice
TransFuse	prostate	MRI	MSD	76.39%
Pollastri et al. [44]	prostate	MRI	Prostate-MRI-US-Biopsy	87.1%
		MRI	PROMISE12	82.0%
		MRI	Fine-Tuned for PROMISE12	86.5%
CoTr	multi-organ	CT	Synapse	85.0%
UNETR	multi-organ	CT	MSD	89.1%
nnFormer	multi-organ	CT	Synapse	86.57%
D-Former	multi-organ	CT	Synapse	88.83%
TransFusion	LV, Myo, RV	MRI	ACDC	87.70%
nnFormer	LV, Myo, RV	MRI	ACDC	92.06%
UTNetV2	LV, Myo, RV	MRI	ACDC	92.14±0.12%
D-Former	LV, Myo, RV	MRI	ACDC	92.29%
Tempera	RV	MRI	bSSFP CINE MRI	83.6%(SA), 79.8% (LA)
SAEM	intracranial blood vessel	CT	provided by hospital	95.15%
Karimi et al. [42]	brain cortical plate	T2 MRI	–	87.9%
UNETR	brain tumor	MRI/CT	MSD	58.5%(ET), 78.9%(WT), 76.1%(TC)
nnFormer	brain tumor	MRI	BraTS 2016, 2017 subset	81.8%(ET), 91.3%(WT), 86.0%(TC)
TransBTS	brain tumor	MRI	BraTS 2019 validation dataset	78.93%(ET), 90.00%(WT), 81.94%(TC)
			BraTS 2020 validation dataset	78.73%(ET), 90.09%(WT), 81.73%(TC)
MISSU	brain tumor	MRI	BraTS 2019 dataset	80.14%(ET), 89.98%(WT), 85.77%(TC)
BiTr-Unet	brain tumor	MRI	BraTS 2021 testing dataset	72.56%(ET), 76.39%(WT), 74.22%(TC)
Swin UNETR	brain tumor	MRI	BraTS 2021 testing dataset	85.3%(ET), 92.7%(WT), 87.6%(TC)
VT-UNet	brain tumor	MRI	BraTS 2021 testing dataset	85.59%(ET), 91.20%(WT), 87.41%(TC)
TranSiam	brain tumor	MRI	BraTS 2019 validation dataset	89.26%
			BraTS 2020 validation dataset	89.34%
T-AutoML	lung lesion	CT	MSD (2018)	75.33%
TSFMUNet	lung cancer	CT	MSD	87.17%
AFTer-UNet	lung(L), lung(R)	CT	in-house thorax-85	97.80%(R), 97.90%(L)

and medical images. However, pre-training has proven to be advantageous when processing small medical datasets using the Swin-Unet model. Even though the Swin-Unet implements the shifted window mechanism to reduce the complexity of self-attention, thereby rendering it the model with the lowest FLOPs (8.64G) among comparable models, it solely relies on the pure transformer structure, without any convolutional operations, which is unable to procure sufficient prior knowledge. As a result, Swin-Unet is unsuitable for small datasets. Global and local information is crucial for intensive prediction tasks (such as segmentation). Similarly, LeViT-UNet [48], UCTransNet [19] and TransAttUnet [34] do not perform outstanding. Although LeViT-UNet adopts CNN-Transferor structures in the encoder, it focuses on a faster encoder and ignores segmentation accuracy. UCTransNet and TransAttUnet introduce the transformer structure between the encoder and decoder to minimize the semantic gap through the idea of multi-scale feature fusion, enabling high-precision localization of anomalous regions. Despite this, they only utilize simple CNN blocks on the encoder, which in results insufficient local information.

In general, because convolution only obtains information from adjacent pixels, it lacks the ability to capture global information, thereby necessitating the introduction of transformer structures. Detailed information such as texture, brought about by convolutional operations, and global information, captured by transformer structures, are both indispensable for the medical image segmentation task. It can be seen that the combination of CNN and transformer is beneficial for segmentation.

5. Discussion

Different parts of organ segmentation have different segmentation difficulties. For example, different shapes and sizes, too much noise, unclear edge segmentation and so on. The characteristics of body parts also add difficulties to segmentation, such as heart beating, blood flow, lung movement during breathing, and multiple abdominal organs. The image characteristics generated by different acquisition systems are different, resulting in different acquisition systems used in different parts. For example, brain vascular imaging methods mainly include computed tomography angiography (CTA), digital subtraction angiography (DSA) and magnetic resonance angiography (MRA) [92], while renal imaging methods mainly adopt US, magnetic resonance imaging (MRI) and computed tomography (CT) [93]. Therefore, we should choose different segmentation methods according to the imaging characteristics of different parts or different acquisition systems.

In 3D data from MRI and CT, a part is sent 3D imaging directly into the model, while some are 2D slices from 3D data. Based on 3D data, we summarized the main transformer models in Table 8, and the evaluation indicator is unified using Dice. such as TransFuse [20], D-Former [25], VT-UNet [31] and AFTer-UNet [37] etc, this problem is solved by reducing the amount of parameters. However, the lack of information is often associated with reducing the computational complexity, which causes it difficult to improve the accuracy of segmentation. Therefore, reducing the computational complexity while improving the segmentation accuracy is still a great challenge in medical image segmentation.

In addition, some representative network structures are given, which highlights the position of the transformer in the network, as shown in Fig. 12. (a) is the structure of U-Net, composed of an encoder and a decoder. In the models this work reviewed, the majority are based on U-Net which combines transformer structures and CNN to gather global information through transformer blocks and local information through CNN. TransUnet is the most representative example of this kind of structure. As seen in Fig. 12(b), CNN structures as the shallow layer of the encoder and transformer structures were positioned in the encoder's deep layer as a feature extractor to build long-distance dependency. Similar to the TransUnet structure, TransClaw U-net, LeViT UNet, and TransNUNet were additional networks. However, in the UNETR model, the transformer structure was used as the whole encoder instead of the CNN-Transformer structure. Since the computational complexity of the transformer was quadratically related to the number of tokens, some works inserted transformer structures at the bottleneck of the model structure to reduce the sequence length, especially in 3D tasks, as shown in Fig. 12(e). In addition to being a feature extractor, the transformer structure can also fuse multi-scale feature information in place of the original jump connection to narrow the semantic gap. Two popular technologies are depicted in UCTransNet (c) and HT-Net (d). One is that the transformer in HT-Net replaces the separate skip

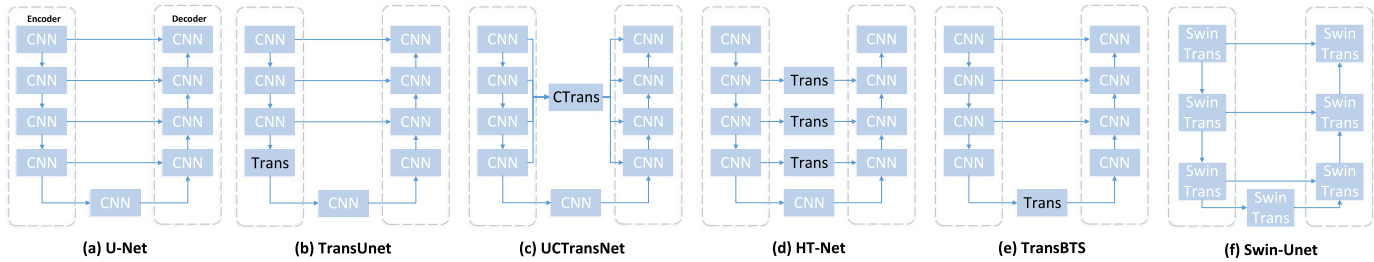

Fig. 12. Comparison of transformer module positions in different models. ((a) is the structure diagram of U-Net. (b)–(e) are CNN-Transformer models based on U-Net, and (f) is the pure transformer model.).

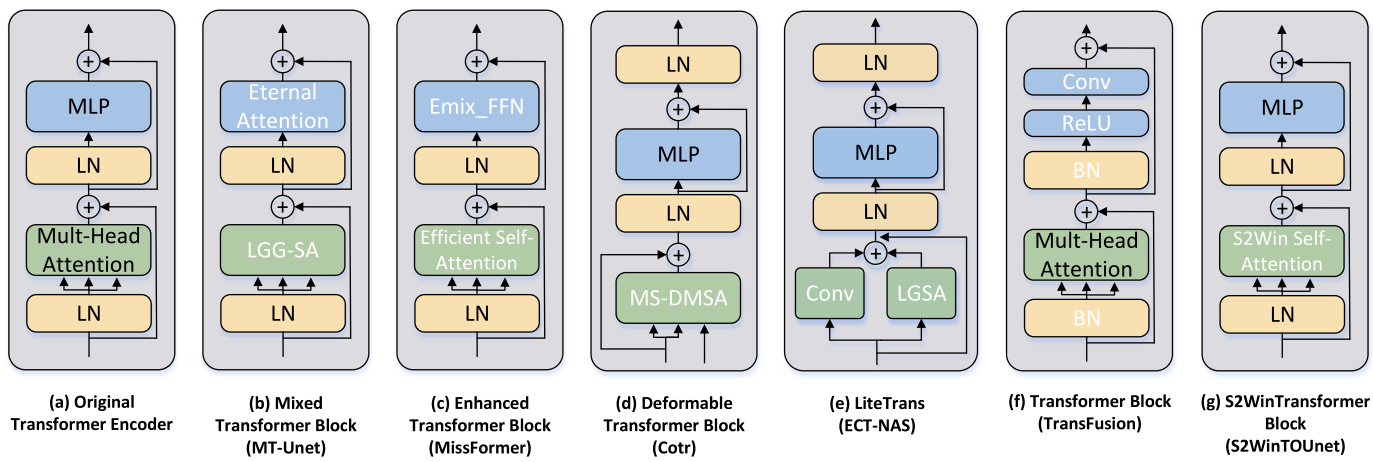

Fig. 13. Structure comparison diagram of different transformer blocks. ((a) is the structure diagram of the original transformer encoder. (b)–(g) are redesigned transformer blocks. The redesigned part of the transformer structure is marked in white font.).

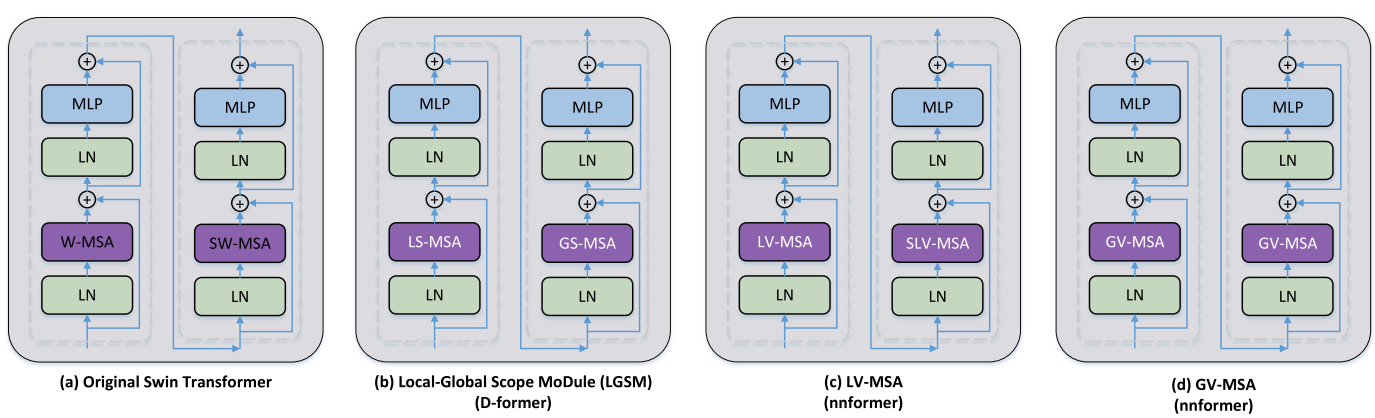

Fig. 14. Structure comparison diagram of different Swin transformer blocks. ((a) is the structure diagram of the original Swin transformer block. (b)–(d) are redesigned Swin transformer blocks. The redesigned part of the Swin transformer structure is marked in white font.).

connection, and the other is that the CTrans module in UCTransNet directly fuses the feature information of all layers.

From the perspective of structure modification, the transformer structure and Swin transformer structure were redesigned, as shown in Figs. 13 and 14. Fig. 13 shows the changed portion of the transformer structure. The multi-head attention mechanism was the only thing that Cotr, ECT-NAS, and S^2WinTOUnet changed. The TransFusion model altered the MLP portion and swapped layer normalization (LN) for batch normalization (BN). However, in the MT-Unet and MissTransformer models, the multi-head attention mechanism and MLP structure have both been changed. It is important to note that, while CNN branches and LGSA modules were introduced into LiteTrans to simultaneously capture local and global information, transformer blocks were frequently employed in most work to capture global features. However, in the Swin transformer structure, the current research only modified the multi-head attention part, not the MLP module.

6. Conclusion and prospect

This work reviewed the application of transformer in medical image segmentation, compared and analyzed the position and characteristics of transformer structures in different models, and gave an intuitive comparison of different models on data sets. The success of the transformer in medical image segmentation tasks demonstrates the potential for the transformer to be applied in the vision domain. Many scholars combined transformer blocks with CNN, mainly based on U-Net. Local features were captured through CNN structures such as U-Net and Claw

U-Net, and global features were acquired through transformer structure. Additionally, in some work, the original transformer structure was modified to extract global–local information. The transformer modules were placed at the encoder, decoder, bottleneck or skip connections. A few studies used the transformer during the decoder, and others typically combined with the CNN layer to put in the encoder for better feature extraction. However, the application of the transformer will result in heavy computational overhead, so transformer blocks are generally used for low-resolution feature maps. Because this can result in some feature information loss, some researchers directly process high-resolution images by modifying the structure of the transformer. Transformer blocks were placed in skip connections to fuse the multi-scale information to improve the segmentation accuracy. In terms of modifying transformer structure, researchers started with a multi-head self-attention mechanism and MLP part. On the one hand, they reduced the number of parameters, and on the other hand, they captured global–local information. In addition, a few works used absolute positional encoding (APE), conditional positional encoding (CPE), relative positional encoding (RPE), 3D positional encoding, but some researchers removed the position coding.

In another regard, it is important to note that there have not been as many studies relating to models using the transformer in conjunction with other models and those utilizing a pure transformer (without using any convolution) as those based on U-Net. After Swin transformer became available, researchers applied Swin transformer to medical segmentation images. It is possible, therefore, that transformer combined with U-Net has a higher segmentation effect than other approaches. Because U-Net can effectively capture detailed information and the transformer can acquire global and long-range semantic information. This combination method can not only capture local and global feature information by using CNN-Transformer structure but also avoid loss of detail information due to missing CNN structure and excessive parameters due to pure transformer structure.

Prior studies have noted the importance of multiscale modules and multimodal images. Multiscale modules enable the capturing of richer semantic information in terms of both local and global details. The approach that takes advantage of local attention mechanisms not only reduces the computational burden but also captures a significantly higher level of detail. Information loss can also be mitigated by the global mechanism. Multimodal segmentation algorithm can deliver effective results for medical images from CT, MIR, X-RAY, US etc. Therefore, further studies with more focus on multi-modal segmentation algorithms are suggested. Not to be overlooked, it has been shown that the inclusion of residual connections can also improve segmentation accuracy. In medical images, we need to consider the problem of segmentation of 3D images, 3D original images can improve the segmentation accuracy than 2D slices, but there are a limited number of samples that can be learned, and computing resources are consumed excessively. Therefore, it is important to balance the relationship between accuracy and complexity. Meanwhile, the problem of less medical image data should be considered.

From the application scenario, we found that the research on the lung is relatively less than on other body parts. In the future, it is a good direction to apply transformer structure to lung segmentation research. Models with good segmentation performance can also be transferred to other body parts for segmentation. Starting from the transformer structure, how to reduce the number of parameters brought by the transformer module and the application of position coding are good prospects in future work. In addition, most transformer structures are used to extract global features. However, using transformer structures to capture local features is also a promising research direction. From the overall structure of the model, how to combine transformer with CNN for medical image segmentation is the key point. There is great potential for how to effectively use transformer blocks and other mechanisms in future practice. In addition, this work only reviewed the transformer model in the field of medical image segmentation and did not discuss the classification and detection tasks in the field of medical image. In future work, scholars can learn more ideas from this work by combining classification and detection tasks. We believe that the transformer will have a good development in the field of medical image segmentation.

Declaration of competing interest

The authors declare that they have no known competing financial interests or personal relationships that could have appeared to influence the work reported in this paper.

Data availability

No data was used for the research described in the article.

Acknowledgments

This work was supported by the National Natural Science Foundation of China (Grant Nos. 61971078), and Chongqing Natural Science Foundation (Grant No. CSTB2022NSCQ-MSX0923). This study does not involve any ethical issue. Thank Professor Xin Xu (College of Intelligent Science, National University of Defense Technology) for his revision and correction of this article.

References

[1] O. Ronneberger, P. Fischer, T. Brox, U-net: Convolutional networks for biomedical image segmentation, in: International Conference on Medical Image Computing and Computer-Assisted Intervention, Springer, 2015, pp. 234–241.

[2] Z. Zhou, M.M. Rahman Siddiquee, N. Tajbakhsh, J. Liang, Unet++: A nested u-net architecture for medical image segmentation, in: Deep Learning in Medical Image Analysis and Multimodal Learning for Clinical Decision Support, Springer, 2018, pp. 3–11.

[3] H. Xiao, Z. Ran, S. Mabu, Y. Li, L. Li, SAUNet++: An automatic segmentation model of COVID-19 lesion from CT slices, Vis. Comput. (2022) 1–14.

[4] C. Yao, J. Tang, M. Hu, Y. Wu, W. Guo, Q. Li, X.-P. Zhang, Claw u-net: A unet-based network with deep feature concatenation for scleral blood vessel segmentation, 2020, arXiv preprint arXiv:2010.10163.

[5] F. Milletari, N. Navab, S.-A. Ahmadi, V-net: Fully convolutional neural networks for volumetric medical image segmentation, in: 2016 Fourth International Conference on 3D Vision (3DV), IEEE, 2016, pp. 565–571.

[6] F. Isensee, J. Petersen, A. Klein, D. Zimmerer, P.F. Jaeger, S. Kohl, J. Wasserthal, G. Koehler, T. Norajitra, S. Wirkert, et al., Nnu-net: Self-adapting framework for u-net-based medical image segmentation, 2018, arXiv preprint arXiv:1809.10486.

[7] W. Zhang, T. Du, J. Wang, Deep learning over multi-field categorical data, in: European Conference on Information Retrieval, Springer, 2016, pp. 45–57.

[8] V. Badrinarayanan, A. Kendall, R. Cipolla, Segnet: A deep convolutional encoder-decoder architecture for image segmentation, IEEE Trans. Pattern Anal. Mach. Intell. 39 (12) (2017) 2481–2495.

[9] G. Lin, A. Milan, C. Shen, I. Reid, Refinenet: Multi-path refinement networks for high-resolution semantic segmentation, in: Proceedings of the IEEE Conference on Computer Vision and Pattern Recognition, 2017, pp. 1925–1934.

[10] B. Li, S. Liu, F. Wu, G. Li, M. Zhong, X. Guan, RT-Unet: An advanced network based on residual network and transformer for medical image segmentation, Int. J. Intell. Syst. 37 (11) (2022) 8565–8582.

[11] S. Jiang, J. Li, TransCUNet: Unet cross fused transformer for medical image segmentation, Comput. Biol. Med. 150 (2022) 106207.

[12] J. Zhang, Y. Liu, Q. Wu, Y. Wang, Y. Liu, X. Xu, B. Song, SWTRU: Star-shaped window transformer reinforced U-net for medical image segmentation, Comput. Biol. Med. 150 (2022) 105954.

[13] J. Chen, Y. Lu, Q. Yu, X. Luo, E. Adeli, Y. Wang, L. Lu, A.L. Yuille, Y. Zhou, Transunet: Transformers make strong encoders for medical image segmentation, 2021, arXiv preprint arXiv:2102.04306.

[14] Y. Li, Y. Zhang, J.-Y. Liu, K. Wang, K. Zhang, G.-S. Zhang, X.-F. Liao, G. Yang, Global transformer and dual local attention network via deep-shallow hierarchical feature fusion for retinal vessel segmentation, IEEE Trans. Cybern. (2022).

[15] H. Cao, Y. Wang, J. Chen, D. Jiang, X. Zhang, Q. Tian, M. Wang, Swin-unet: Unet-like pure transformer for medical image segmentation, 2021, arXiv preprint arXiv:2105.05537.

[16] A. Dosovitskiy, L. Beyer, A. Kolesnikov, D. Weissenborn, X. Zhai, T. Unterthiner, M. Dehghani, M. Minderer, G. Heigold, S. Gelly, et al., An image is worth 16x16 words: Transformers for image recognition at scale, 2020, arXiv preprint arXiv:2010.11929.

[17] Y. Chang, H. Menghan, Z. Guangtao, Z. Xiao-Ping, Transclaw u-net: Claw u-net with transformers for medical image segmentation, 2021, arXiv preprint arXiv:2107.05188.

[18] H. Wang, S. Xie, L. Lin, Y. Iwamoto, X.-H. Han, Y.-W. Chen, R. Tong, Mixed transformer U-net for medical image segmentation, 2021, arXiv preprint arXiv:2111.04734.

[19] H. Wang, P. Cao, J. Wang, O.R. Zaiane, UCTransNet: Rethinking the skip connections in U-net from a channel-wise perspective with transformer, 2021, arXiv preprint arXiv:2109.04335.

[20] Y. Zhang, H. Liu, Q. Hu, Transfuse: Fusing transformers and cnns for medical image segmentation, in: International Conference on Medical Image Computing and Computer-Assisted Intervention, Springer, 2021, pp. 14–24.

[21] Y. Xie, J. Zhang, C. Shen, Y. Xia, Cotr: Efficiently bridging cnn and transformer for 3d medical image segmentation, in: International Conference on Medical Image Computing and Computer-Assisted Intervention, Springer, 2021, pp. 171–180.

[22] Y. Gao, M. Zhou, D. Liu, D. Metaxas, A multi-scale transformer for medical image segmentation: Architectures, model efficiency, and benchmarks, 2022, arXiv preprint arXiv:2203.00131.

[23] X. Yang, X. Tian, TransNUNet: Using attention mechanism for whole heart segmentation, in: 2022 IEEE 2nd International Conference on Power, Electronics and Computer Applications, ICPECA, IEEE, 2022, pp. 553–556.

[24] H.-Y. Zhou, J. Guo, Y. Zhang, L. Yu, L. Wang, Y. Yu, Nnformer: Interleaved transformer for volumetric segmentation, 2021, arXiv preprint arXiv:2109.03201.

[25] Y. Wu, K. Liao, J. Chen, D.Z. Chen, J. Wang, H. Gao, J. Wu, D-former: A U-shaped dilated transformer for 3D medical image segmentation, 2022, arXiv preprint arXiv:2201.00462.

[26] J. Zhang, Y. Liu, Q. Wu, Y. Liu, Y. Wang, X. Xu, B. Song, S2wintounet: Star-Shaped Window Transformer Onion U-Net for Medical Image Segmentation, Available At SSRN 3992963.

[27] W. Wang, C. Chen, M. Ding, H. Yu, S. Zha, J. Li, Transbts: Multimodal brain tumor segmentation using transformer, in: International Conference on Medical Image Computing and Computer-Assisted Intervention, Springer, 2021, pp. 109–119.

[28] A. Hatamizadeh, Y. Tang, V. Nath, D. Yang, A. Myronenko, B. Landman, H.R. Roth, D. Xu, Unetr: Transformers for 3d medical image segmentation, in: Proceedings of the IEEE/CVF Winter Conference on Applications of Computer Vision, 2022, pp. 574–584.

[29] A. Hatamizadeh, V. Nath, Y. Tang, D. Yang, H. Roth, D. Xu, Swin UNETR: Swin transformers for semantic segmentation of brain tumors in MRI images, 2022, arXiv preprint arXiv:2201.01266.

[30] Q. Jia, H. Shu, Bitr-unet: a CNN-transformer combined network for MRI brain tumor segmentation, 2021, arXiv preprint arXiv:2109.12271.

[31] H. Peiris, M. Hayat, Z. Chen, G. Egan, M. Harandi, A volumetric transformer for accurate 3D tumor segmentation, 2021, arXiv preprint arXiv:2111.13300.

[32] Q. Sun, N. Fang, Z. Liu, L. Zhao, Y. Wen, H. Lin, HybridCTrm: Bridging CNN and transformer for multimodal brain image segmentation, J. Healthc. Eng. 2021 (2021).

[33] Y. Li, J. Ni, A. Elazab, J. Wu, Multiple self-attention network for intracranial vessel segmentation, in: 2021 International Joint Conference on Neural Networks, IJCNN, IEEE, 2021, pp. 1–8.

[34] B. Chen, Y. Liu, Z. Zhang, G. Lu, D. Zhang, Transattunet: Multi-level attention-guided u-net with transformer for medical image segmentation, 2021, arXiv preprint arXiv:2107.05274.

[35] M. Ma, H. Xia, Y. Tan, H. Li, S. Song, HT-Net: hierarchical context-attention transformer network for medical ct image segmentation, Appl. Intell. (2022) 1–14.

[36] D. Guo, D. Terzopoulos, A transformer-based network for anisotropic 3d medical image segmentation, in: 2020 25th International Conference on Pattern Recognition, ICPR, IEEE, 2021, pp. 8857–8861.

[37] X. Yan, H. Tang, S. Sun, H. Ma, D. Kong, X. Xie, After-unet: Axial fusion transformer unet for medical image segmentation, in: Proceedings of the IEEE/CVF Winter Conference on Applications of Computer Vision, 2022, pp. 3971–3981.

[38] J. Li, H. Chen, Y. Peng, Y. Li, Multimodal lung mass segmentation network based on cross modal space matching, J. Electron. Inf. (2022) 1–7.

[39] Y. Xie, J. Zhang, Y. Xia, Q. Wu, Unified 2D and 3D pre-training for medical image classification and segmentation, 2021, arXiv preprint arXiv:2112.09356.

[40] Z. Liu, Y. Lin, Y. Cao, H. Hu, Y. Wei, Z. Zhang, S. Lin, B. Guo, Swin transformer: Hierarchical vision transformer using shifted windows, in: Proceedings of the IEEE/CVF International Conference on Computer Vision, 2021, pp. 10012–10022.

[41] A. Vaswani, N. Shazeer, N. Parmar, J. Uszkoreit, L. Jones, A.N. Gomez, Ł. Kaiser, I. Polosukhin, Attention is all you need, Adv. Neural Inf. Process. Syst. 30 (2017).

[42] D. Karimi, S.D. Vasylechko, A. Gholipour, Convolution-free medical image segmentation using transformers, in: International Conference on Medical Image Computing and Computer-Assisted Intervention, Springer, 2021, pp. 78–88.

[43] Synapse multi-organ segmentation dataset, 2015, Website, https://www.synapse.org/#!Synapse:syn3193805/wiki/217789.

[44] F. Pollastri, M. Cipriano, F. Bolelli, C. Grana, Long-range 3D self-attention for MRI prostate segmentation, in: IEEE International Symposium on Biomedical Imaging, ISBI, 2022.

[45] S. Natarajan, A. Priester, D. Margolis, J. Huang, L. Marks, Prostate MRI and ultrasound with pathology and coordinates of tracked biopsy (prostate-MRI-US-biopsy), Cancer Imaging Arch 10 (2020) 7937.

[46] A.L. Simpson, M. Antonelli, S. Bakas, M. Bilello, K. Farahani, B. Van Ginneken, A. Kopp-Schneider, B.A. Landman, G. Litjens, B. Menze, et al., A large annotated medical image dataset for the development and evaluation of segmentation algorithms, 2019, arXiv preprint arXiv:1902.09063.

[47] M. Caron, H. Touvron, I. Misra, H. Jégou, J. Mairal, P. Bojanowski, A. Joulin, Emerging properties in self-supervised vision transformers, in: Proceedings of the IEEE/CVF International Conference on Computer Vision, 2021, pp. 9650–9660.

[48] G. Xu, X. Wu, X. Zhang, X. He, Levit-unet: Make faster encoders with transformer for medical image segmentation, 2021, arXiv preprint arXiv:2107.08623.

[49] B. Graham, A. El-Nouby, H. Touvron, P. Stock, A. Joulin, H. Jégou, M. Douze, Levit: a vision transformer in convnet's clothing for faster inference, in: Proceedings of the IEEE/CVF International Conference on Computer Vision, 2021, pp. 12259–12269.

[50] O. Petit, N. Thome, C. Rambour, L. Themyr, T. Collins, L. Soler, U-net transformer: Self and cross attention for medical image segmentation, in: International Workshop on Machine Learning in Medical Imaging, Springer, 2021, pp. 267–276.

[51] M.-H. Guo, Z.-N. Liu, T.-J. Mu, S.-M. Hu, Beyond self-attention: External attention using two linear layers for visual tasks, 2021, arXiv preprint arXiv:2105.02358.

[52] X. Huang, Z. Deng, D. Li, X. Yuan, MISSFormer: An effective medical image segmentation transformer, 2021, arXiv preprint arXiv:2109.07162.

[53] D. Sui, K. Zhang, W. Liu, J. Chen, X. Ma, Z. Tian, CST: A multitask learning framework for Colorectal Cancer Region mining based on transformer, Biomed. Res. Int. 2021 (2021).

[54] J. Long, E. Shelhamer, T. Darrell, Fully convolutional networks for semantic segmentation, in: Proceedings of the IEEE Conference on Computer Vision and Pattern Recognition, 2015, pp. 3431–3440.

[55] D. Tran, H. Wang, L. Torresani, J. Ray, Y. LeCun, M. Paluri, A closer look at spatiotemporal convolutions for action recognition, in: Proceedings of the IEEE Conference on Computer Vision and Pattern Recognition, 2018, pp. 6450–6459.

[56] W. Wang, E. Xie, X. Li, D.-P. Fan, K. Song, D. Liang, T. Lu, P. Luo, L. Shao, Pyramid vision transformer: A versatile backbone for dense prediction without convolutions, in: Proceedings of the IEEE/CVF International Conference on Computer Vision, 2021, pp. 568–578.

[57] Y. Zhang, J. Feng, X. Guo, Y. Ren, Comparative analysis of U-net and TLMDB GAN for the cardiovascular segmentation of the ventricles in the heart, Comput. Methods Programs Biomed. (2022) 106614.

[58] 2017 Multi-modality whole heart segmentation challenge, 2017, dataset, http://www.sdspeople.fudan.edu.cn/zhuangxiahai/0/mmwhs/.

[59] O. Bernard, A. Lalande, C. Zotti, F. Cervenansky, X. Yang, P.-A. Heng, I. Cetin, K. Lekadir, O. Camara, M.A. Gonzalez Ballester, G. Sanroma, S. Napel, S. Petersen, G. Tziritas, E. Grinias, M. Khened, V.A. Kollerathu, G. Krishnamurthi, M.-M. Rohe, X. Pennec, M. Sermesant, F. Isensee, P. Jaeger, K.H. Maier-Hein, P.M. Full, I. Wolf, S. Engelhardt, C.F. Baumgartner, L.M. Koch, J.M. Wolterink, I. Isgum, Y. Jang, Y. Hong, J. Patravali, S. Jain, O. Humbert, P.-M. Jodoin, Deep learning techniques for automatic MRI cardiac multi-structures segmentation and diagnosis: Is the problem solved? IEEE Trans. Med. Imaging 37 (11) (2018) 2514–2525.

[60] D. Ouyang, B. He, A. Ghorbani, N. Yuan, J. Ebinger, C.P. Langlotz, P.A. Heidenreich, R.A. Harrington, D.H. Liang, E.A. Ashley, et al., Video-based AI for beat-to-beat assessment of cardiac function, Nature 580 (7802) (2020) 252–256.

[61] V.M. Campello, P. Gkontra, C. Izquierdo, C. Martin-Isla, A. Sojoudi, P.M. Full, K. Maier-Hein, Y. Zhang, Z. He, J. Ma, et al., Multi-centre, multi-vendor and multi-disease cardiac segmentation: the m&ms challenge, IEEE Trans. Med. Imaging 40 (12) (2021) 3543–3554.

[62] S. Woo, J. Park, J.-Y. Lee, I.S. Kweon, Cbam: Convolutional block attention module, in: Proceedings of the European Conference on Computer Vision, ECCV, 2018, pp. 3–19.

[63] Y. Gao, M. Zhou, D.N. Metaxas, Utnet: a hybrid transformer architecture for medical image segmentation, in: International Conference on Medical Image Computing and Computer-Assisted Intervention, Springer, 2021, pp. 61–71.

[64] K. Deng, Y. Meng, D. Gao, J. Bridge, Y. Shen, G. Lip, Y. Zhao, Y. Zheng, TransBridge: A lightweight transformer for left ventricle segmentation in echocardiography, in: International Workshop on Advances in Simplifying Medical Ultrasound, Springer, 2021, pp. 63–72.

[65] W. Wu, K. Niu, Z. He, R2net: Recurrent recalibration network for medical image segmentation, in: 2021 IEEE International Conference on Big Data (Big Data), IEEE, 2021, pp. 3927–3935.

[66] S. Xu, H. Quan, ECT-nas: Searching efficient CNN-transformers architecture for medical image segmentation, in: 2021 IEEE International Conference on Bioinformatics and Biomedicine, BIBM, IEEE, 2021, pp. 1601–1604.

[67] S. Xu, H. Quan, LiteTrans: Reconstruct transformer with convolution for medical image segmentation, in: International Symposium on Bioinformatics Research and Applications, Springer, 2021, pp. 300–313.

[68] D. Liu, Y. Gao, Q. Zhangli, Z. Yan, M. Zhou, D. Metaxas, TransFusion: Multi-view divergent fusion for medical image segmentation with transformers, 2022, arXiv preprint arXiv:2203.10726.

[69] Y. Ji, R. Zhang, H. Wang, Z. Li, L. Wu, S. Zhang, P. Luo, Multi-compound transformer for accurate biomedical image segmentation, in: International Conference on Medical Image Computing and Computer-Assisted Intervention, Springer, 2021, pp. 326–336.

[70] C. Galazis, H. Wu, Z. Li, C. Petri, A.A. Bharath, M. Varela, Tempera: Spatial transformer feature pyramid network for cardiac MRI segmentation, in: International Workshop on Statistical Atlases and Computational Models of the Heart, Springer, 2021, pp. 268–276.

[71] G. Balakrishnan, A. Zhao, M.R. Sabuncu, J. Guttag, A.V. Dalca, VoxelMorph: a learning framework for deformable medical image registration, IEEE Trans. Med. Imaging 38 (8) (2019) 1788–1800.

[72] K. Ta, S.S. Ahn, J.C. Stendahl, A.J. Sinusas, J.S. Duncan, Shape-regularized unsupervised left ventricular motion network with segmentation capability in 3d+ time echocardiography, in: 2021 IEEE 18th International Symposium on Biomedical Imaging, ISBI, IEEE, 2021, pp. 536–540.

[73] H. Sung, J. Ferlay, R.L. Siegel, M. Laversanne, I. Soerjomataram, A. Jemal, F. Bray, Global cancer statistics 2020: GLOBOCAN estimates of incidence and mortality worldwide for 36 cancers in 185 countries, CA: Cancer J. Clin. 71 (3) (2021) 209–249.

[74] Z. Khazaei, E. Goodarzi, V. Borhaninejad, F. Iranmanesh, H. Mirshekarpour, B. Mirzaei, H. Naemi, S.M. Bechashk, I. Darvishi, R. Ershad Sarabi, et al., The association between incidence and mortality of brain cancer and human development index (HDI): an ecological study, BMC Public Health 20 (1) (2020) 1–7.

[75] M. Buda, A. Saha, M.A. Mazurowski, Association of genomic subtypes of lower-grade gliomas with shape features automatically extracted by a deep learning algorithm, Comput. Biol. Med. 109 (2019) 218–225.

[76] M.A. Mazurowski, K. Clark, N.M. Czarnek, P. Shamsesfandabadi, K.B. Peters, A. Saha, Radiogenomics of lower-grade glioma: algorithmically-assessed tumor shape is associated with tumor genomic subtypes and patient outcomes in a multi-institutional study with the cancer genome atlas data, J. Neuro-Oncology 133 (1) (2017) 27–35.

[77] A.M. Mendrik, K.L. Vincken, H.J. Kuijf, M. Breeuwer, W.H. Bouvy, J. De Bresser, A. Alansary, M. De Bruijne, A. Carass, A. El-Baz, et al., Mrbrains challenge: online evaluation framework for brain image segmentation in 3T MRI scans, Comput. Intell. Neurosci. 2015 (2015).

[78] M. Bastiani, J.L. Andersson, L. Cordero-Grande, M. Murgasova, J. Hutter, A.N. Price, A. Makropoulos, S.P. Fitzgibbon, E. Hughes, D. Rueckert, et al., Automated processing pipeline for neonatal diffusion MRI in the developing human connectome project, Neuroimage 185 (2019) 750–763.

[79] Y. Li, W. Cai, Y. Gao, X. Hu, More than encoder: Introducing transformer decoder to upsample, 2021, arXiv preprint arXiv:2106.10637.

[80] N. Wang, S. Lin, X. Li, K. Li, Y. Shen, Y. Gao, L. Ma, MISSU: 3D medical image segmentation via self-distilling TransUNet, 2022, arXiv preprint arXiv:2206.00902.

[81] X. Li, S. Ma, J. Tang, F. Guo, TranSiam: Fusing multimodal visual features using transformer for medical image segmentation, 2022, arXiv preprint arXiv:2204.12185.

[82] Y. Qiu, Y. Liu, S. Li, J. Xu, Miniseg: An extremely minimum network for efficient covid-19 segmentation, in: Proceedings of the AAAI Conference on Artificial Intelligence, Vol. 35, No. 6, 2021, pp. 4846–4854.

[83] W. Sun, J. Chen, L. Yan, J. Lin, Y. Pang, G. Zhang, COVID-19 CT image segmentation method based on swin transformer, Front. Physiol. (2022) 1579.

[84] T. Ai, Z. Yang, H. Hou, C. Zhan, C. Chen, W. Lv, Q. Tao, Z. Sun, L. Xia, Correlation of chest CT and RT-PCR testing in coronavirus disease 2019 (COVID-19) in China: a report of 1014 cases, Radiology (2020).

[85] X. Chen, S. Sun, N. Bai, K. Han, Q. Liu, S. Yao, H. Tang, C. Zhang, Z. Lu, Q. Huang, et al., A deep learning-based auto-segmentation system for organs-at-risk on whole-body computed tomography images for radiation therapy, Radiother. Oncol. 160 (2021) 175–184.

[86] B. Zoph, Q.V. Le, Neural architecture search with reinforcement learning, 2016, arXiv preprint arXiv:1611.01578.

[87] M. Liu, L. Xiao, H. Jiang, Q. He, CCAT-NET: A novel transformer based semi-supervised framework for Covid-19 lung lesion segmentation, in: 2022 IEEE 19th International Symposium on Biomedical Imaging, ISBI, IEEE, 2022, pp. 1–5.

[88] J. Hu, L. Shen, G. Sun, Squeeze-and-excitation networks, in: Proceedings of the IEEE Conference on Computer Vision and Pattern Recognition, 2018, pp. 7132–7141.

[89] D. Yang, A. Myronenko, X. Wang, Z. Xu, H.R. Roth, D. Xu, T-automl: Automated machine learning for lesion segmentation using transformers in 3D medical imaging, in: Proceedings of the IEEE/CVF International Conference on Computer Vision, 2021, pp. 3962–3974.

[90] MSD pancreas segmentation dataset, 2022, dataset, https://aistudio.baidu.com/aistudio/datasetdetail/23914/0.

[91] Non-small cell lung cancer (NSCLC) segmentation dataset, 2020, dataset, https://www.datafountain.cn/competitions/489/datasets.

[92] X. Guo, R. Xiao, Y. Lu, C. Chen, F. Yan, K. Zhou, W. He, Z. Wang, Cerebrovascular segmentation from TOF-MRA based on multiple-U-net with focal loss function, Comput. Methods Programs Biomed. 202 (2021) 105998.

[93] H.R. Torres, S. Queiros, P. Morais, B. Oliveira, J.C. Fonseca, J.L. Vilaca, Kidney segmentation in ultrasound, magnetic resonance and computed tomography images: A systematic review, Comput. Methods Programs Biomed. 157 (2018) 49–67.